Title	K11A_MAIN	
Size A3	Document Number CONTENT	Rev
Date: Thursday, May 27, 2021	Sheet 00	

ANT9

MHB:
1.N41 NSA Primary MiMo
UHB:
1.N78 Diversity

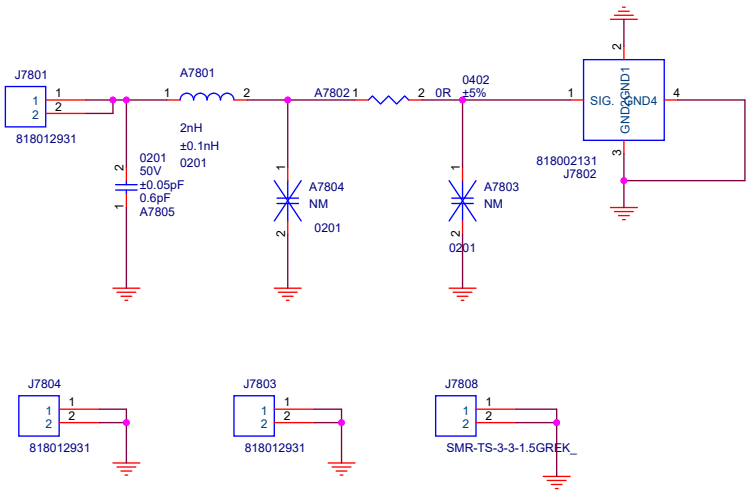

ANT7 SP4T&TUNER

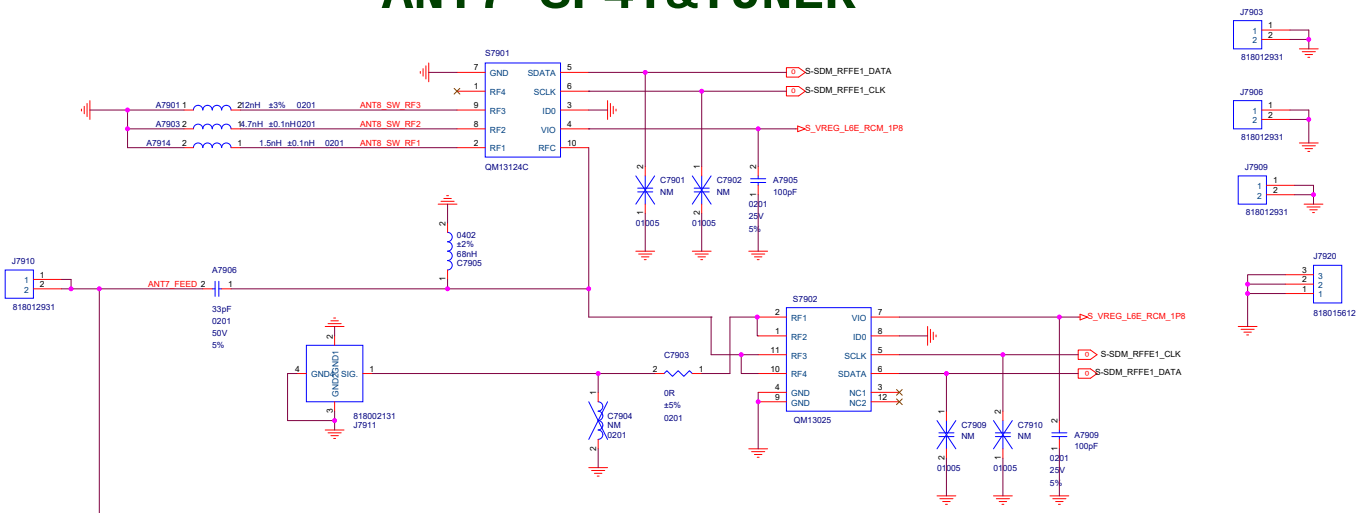

SAR Sensor ADUX1050BCBZ

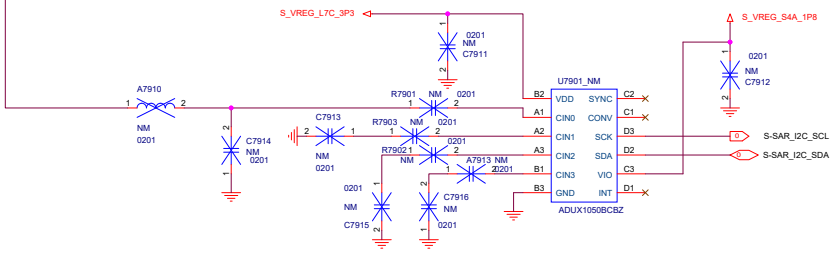

Title	F1 MAIN		
Size A3	Document Number Reserved(for PA)		Rev
Date: Thursday, May 27, 2021		Sheet 0 4	

SPKEAKER

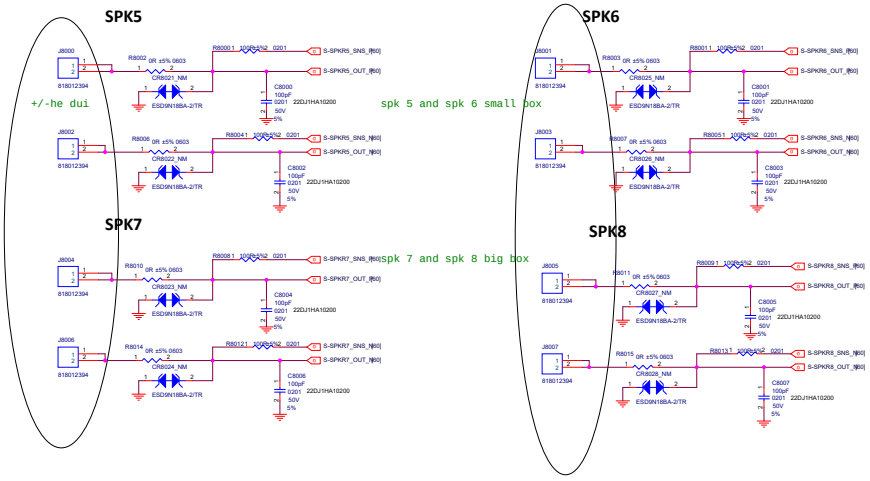

MAIN MIC

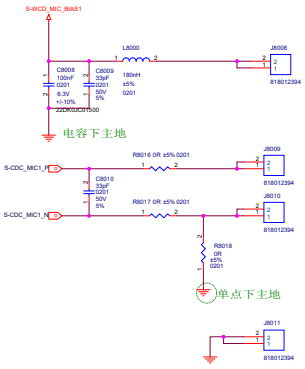

Title	F1 MAIN
Size A2	Document Number SMB1300&NL POWER
Rev	
Date: Thursday, May 27, 2021	Sheet

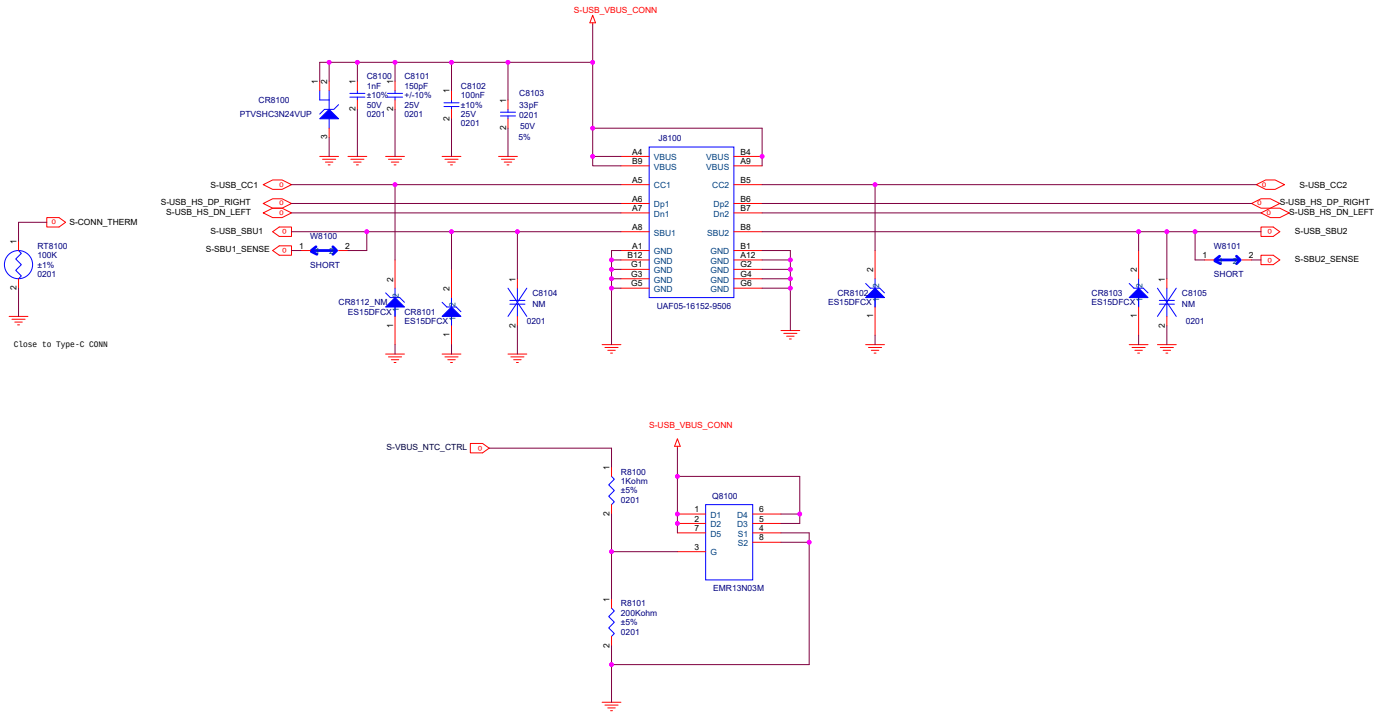

Title	<Title>	
Size A3	Document Number <Doc>	Rev
Date: Thursday, May 27, 2021	Sheet 0 of 4	

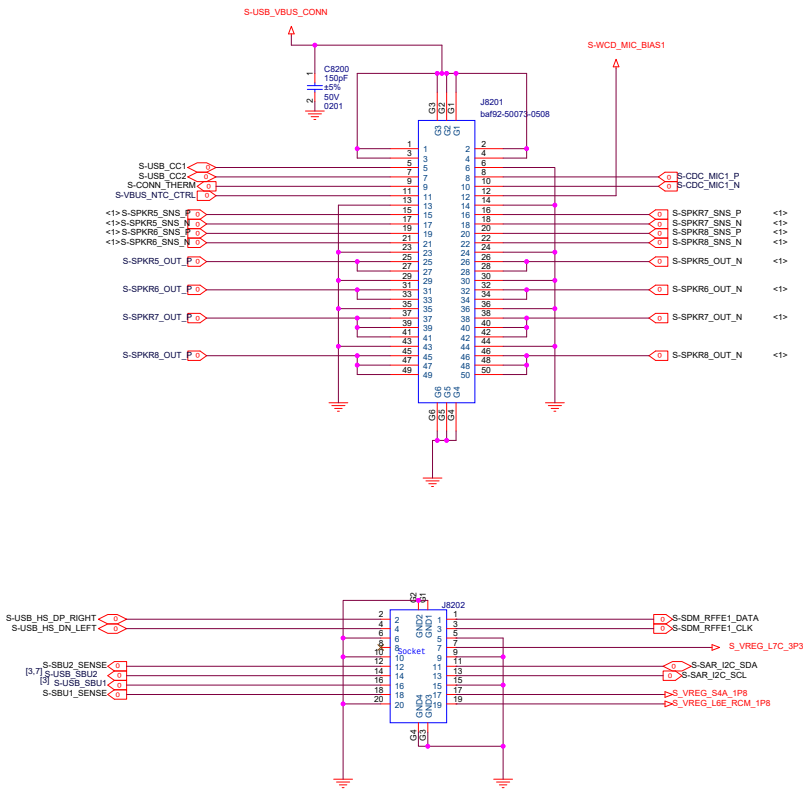

Title	<Title>	
Size A3	Document Number <Doc>	Rev
Date: Thursday, May 27, 2021	Sheet 0 4	

ANT9 RESERVED

MHB:
1.N41 NSA Primary MiMo
UHB:
1.N78 Diversity

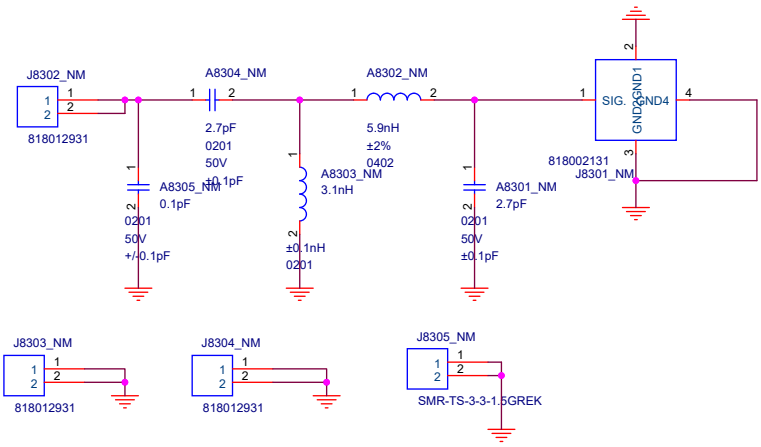

TITLE	<Title>
JOB	Generated Document
	<Date>
DATE	Thursday, May 21, 2026

ANT1

LB:
1.LTE LB Primary
2.NR N28 Primary

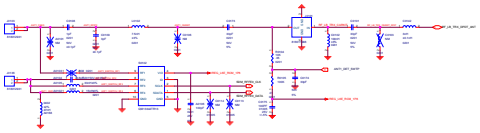

GND

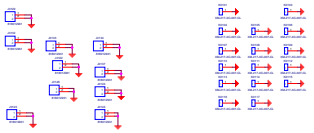

ANT7

MHB:
1.LTE MHB Primary
2.N1/3 Primary
3.N41 SA Primary MiMo
UHB:
1.N78 Primary MiMo

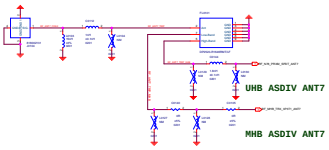

LB DPDT

LB ASDIV(ANT1&ANT7)

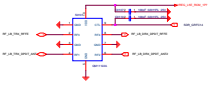

3P3T_#1

MHB ASDIV(ANT2&ANT7)

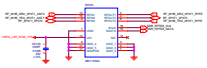

Cable

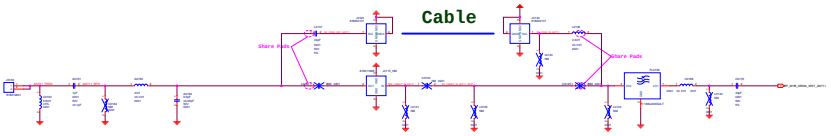

ANT11

MHB:
1.LTE MHB Diversity MiMo
2.N1/3 Diversity MiMo
3.N41 Diversity

3P3T_#2

MHB ASDIV(ANT4&ANT11)

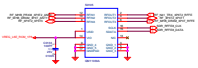

ANT4

MHB:
1.LTE MHB Primary MiMo
2.NR MHB Primary MiMo
3.N41 Primary
4.Sar

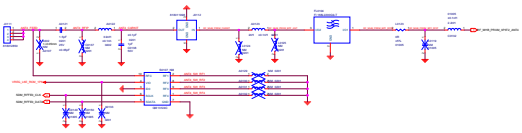

3P3T_#3

N41 ASDIV(ANT9&ANT10)

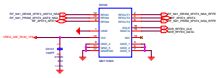

ANT2

LB:
1.LTE LB Diversity
2.NR N28 Diversity
MHB:
1.LTE MHB Diversity
2.NR MHB Diversity
3.N41 SA Primary MiMo

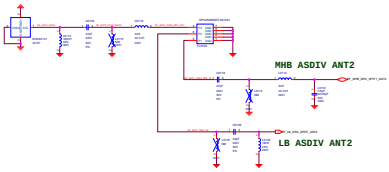

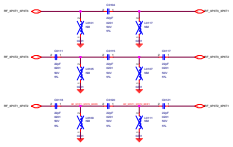

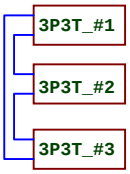

3P3T Matching

ANT5

UHB:
1.N78 Primary(Default)

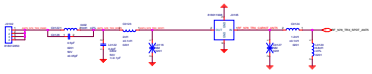

SAR Sensor ADUX1050BCBZ

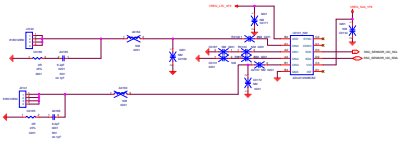

ANT9

MHB:
1.N41 NSA Primary MiMo
UHB:
1.N78 Diversity

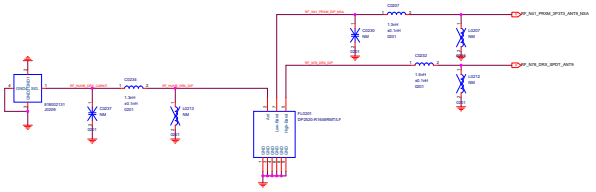

ANT10

MHB:
1.N41 NSA Diversity MiMo
UHB:
1.N78 Diversity MiMo

N78 PRXM
N41 DRXM(NSA)

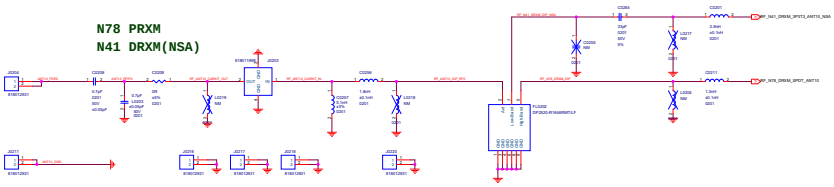

Title	5G5A_TEST_BOARD
Size	Document Number / PX0000 Charger
Date: Tuesday, May 17, 2022	Sheet

PRX QLN5030 Matching

PRX HB

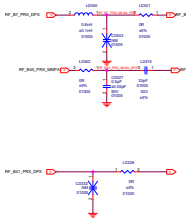

PRX MB

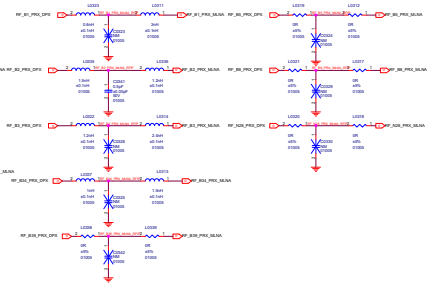

PRX LB

PRX QLN5030

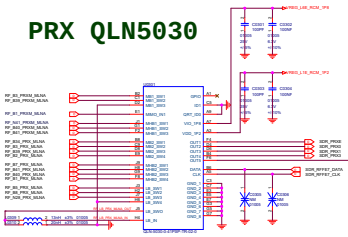

LB_PRX_SPDT

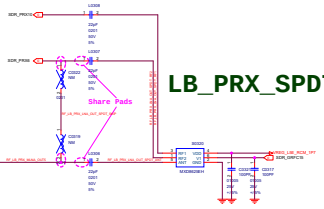

PRX MIMO B40

SP4T_N41_TRX

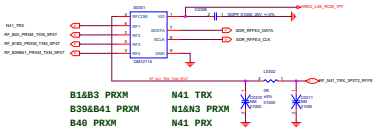

PRX MIMO N41

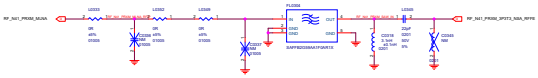

PRX MIMO B39/B41+ELNA

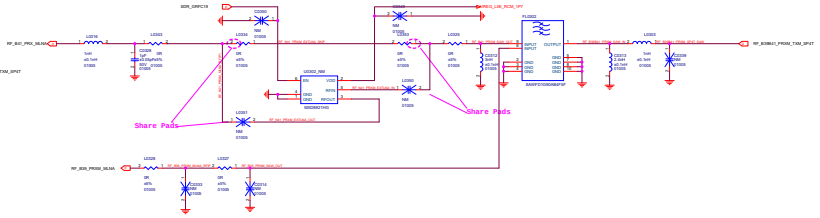

PRX MIMO B1/B3

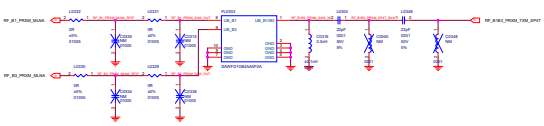

Title	RX1A_TIER_BOARD	
Size	Document Number	Rev
A1	PM8998 Charger	
Date:	Monday, May 18, 2015	Sheet

DRX QLN5030

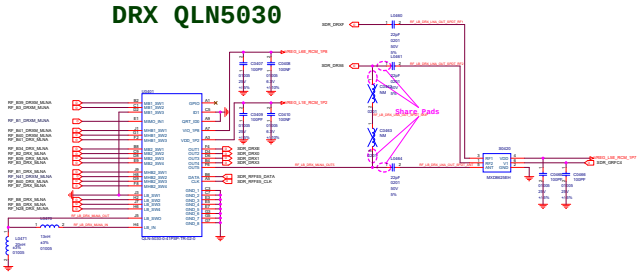

PRX MB

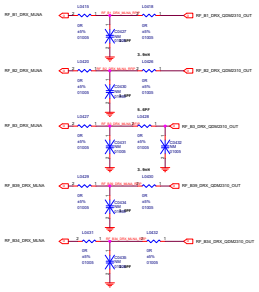

PRX HB

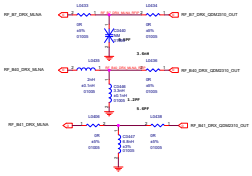

PRX LB

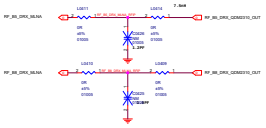

SP4T_DRXM

DiFEM QDM2310

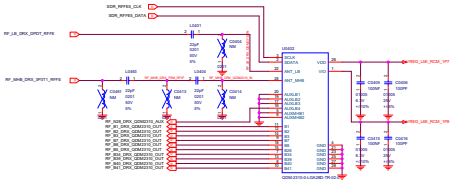

DRX MIMO B40

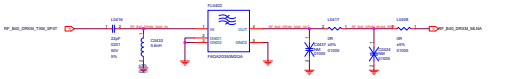

DRX MIMO B39/B41

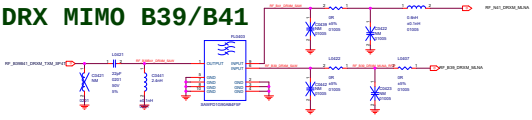

N28 DRX

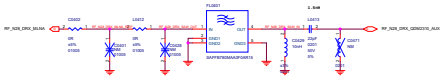

DRX MIMO B1/B3

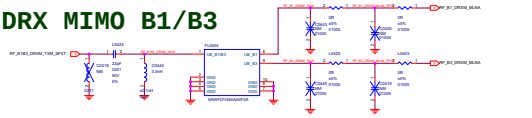

N41 DRXM NSA

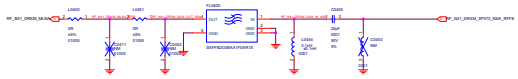

Title	ASUS_TEST_BOARD
Size	A4
Document Number	
Rev	
Date:	Thursday, May 27, 2021

FBRX SWITCH SP4T

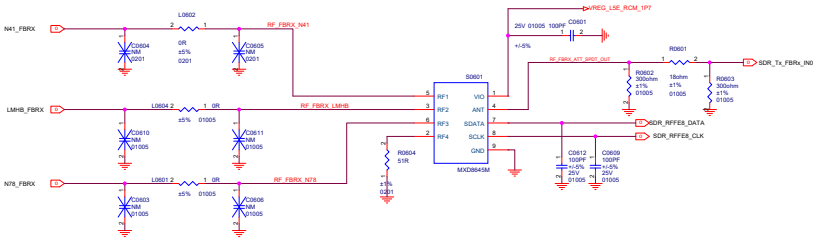

File:	K81A_TEST_BOARD
Size: A2	Document Number: PM855B Charger
Rev:	
Date: Thursday, May 27, 2021	Sheet

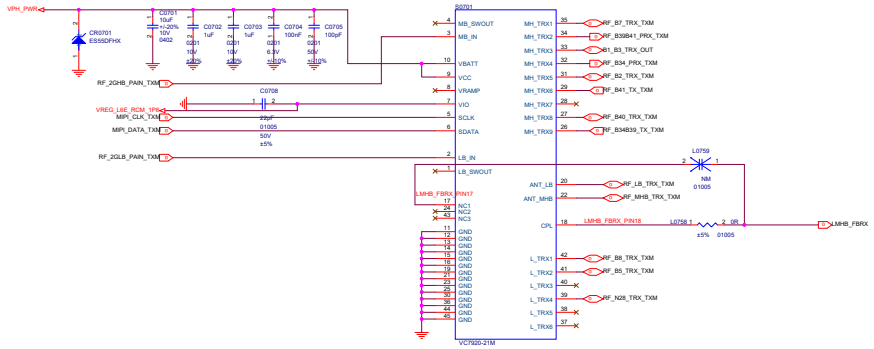

GSM PA_IN MATCH

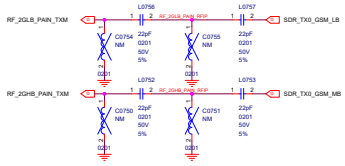

TXM MIPI CTRL

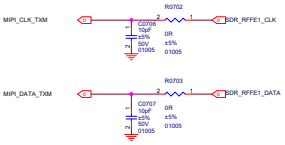

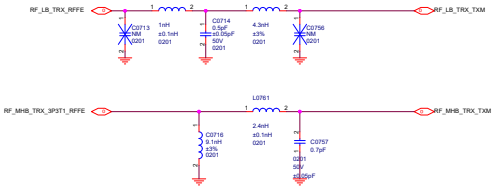

B39+B41 PRX

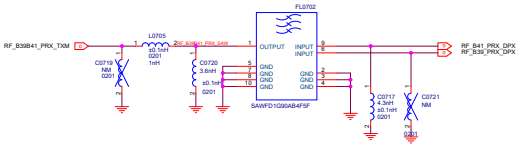

B34 PRX

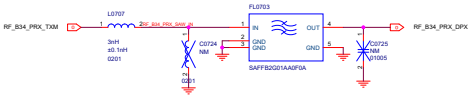

Title	K81A_TEST_BOARD	
Size A2	Document Number PM8550B Charger	Rev
Date: Thursday, May 27, 2021	Sheet	

N41 TX

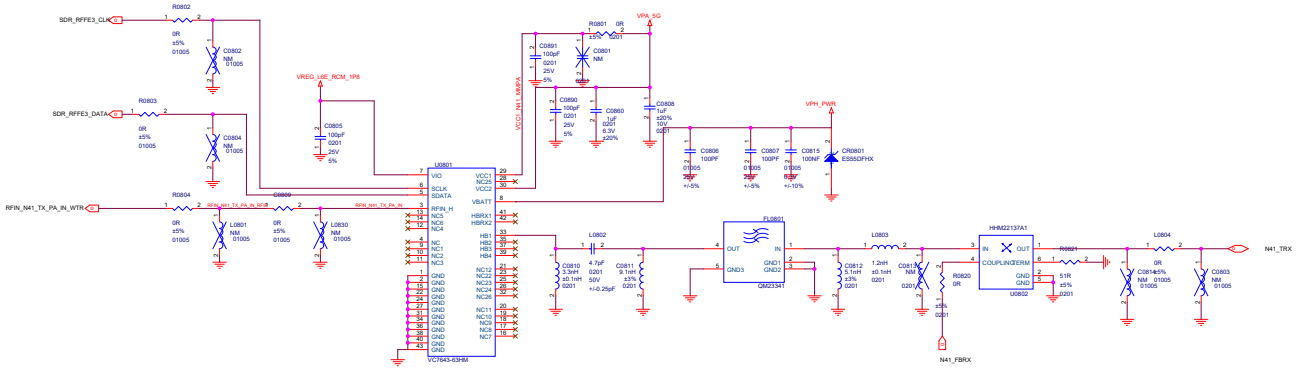

Title	K81A_TEST_BOARD		
Size A2	Document Number PM8655B Charger		Rev
Date: Thursday, May 27, 2021		Sheet	

5G QET

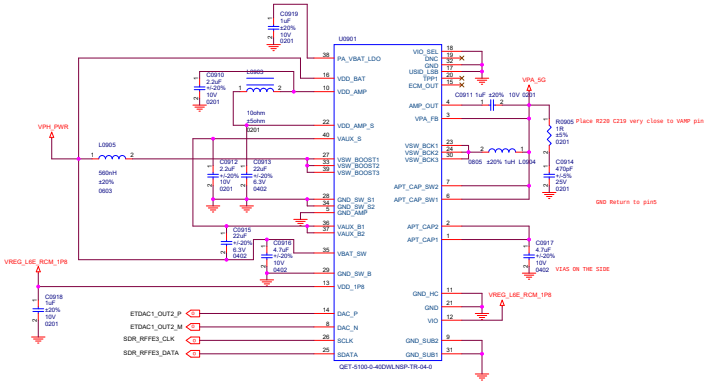

4G QET

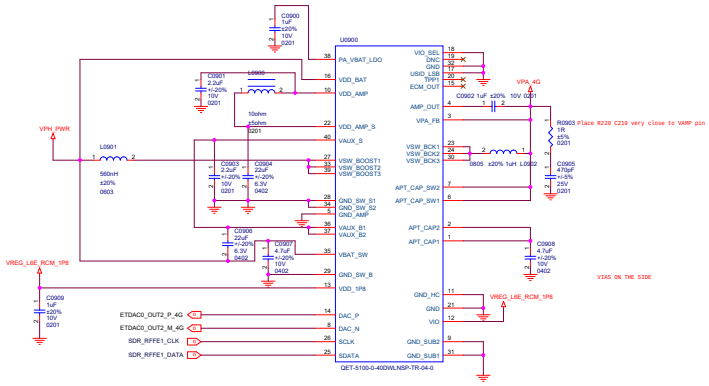

Title	K81A_TEST_BOARD		
Size A2	Document Number PM8550B Charger		Rev
Date: Thursday, May 27, 2021		Sheet	

4G MMMBPA VC7643-63M

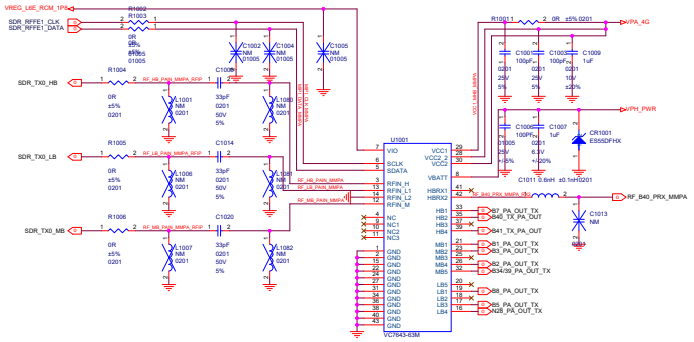

B7 TRX

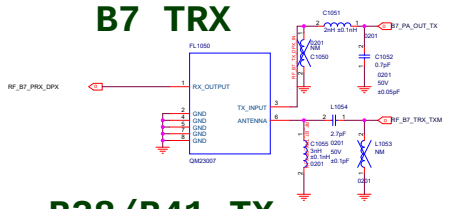

B38/B41 TX

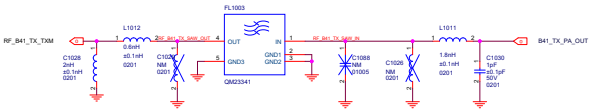

B40 TRX

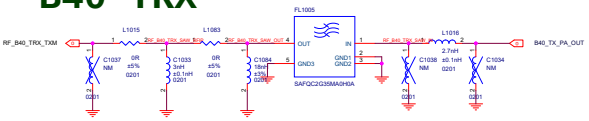

B34/B39 TX

B1B3 TRX

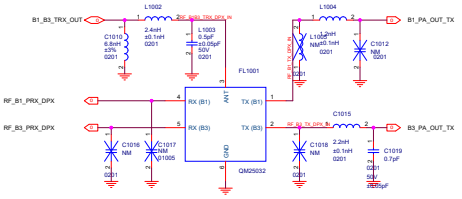

B2 TRX

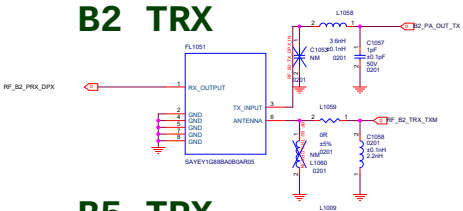

B5 TRX

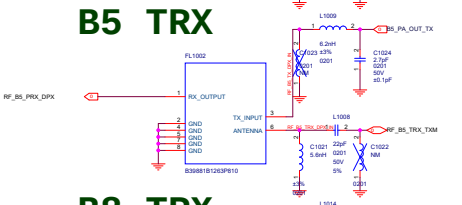

B8 TRX

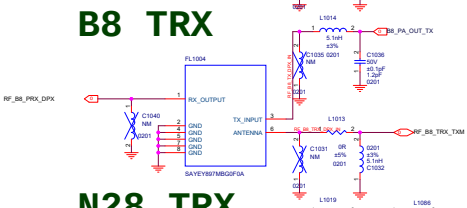

N28 TRX

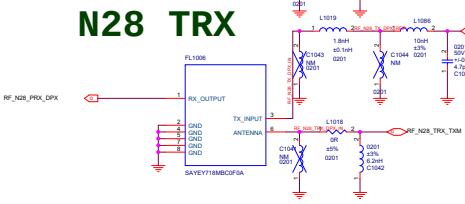

Title	K81A_TEST_BOARD
Size A2	Document Number PM8058 Charger
Rev	
Date: Thursday, May 27, 2021	Sheet

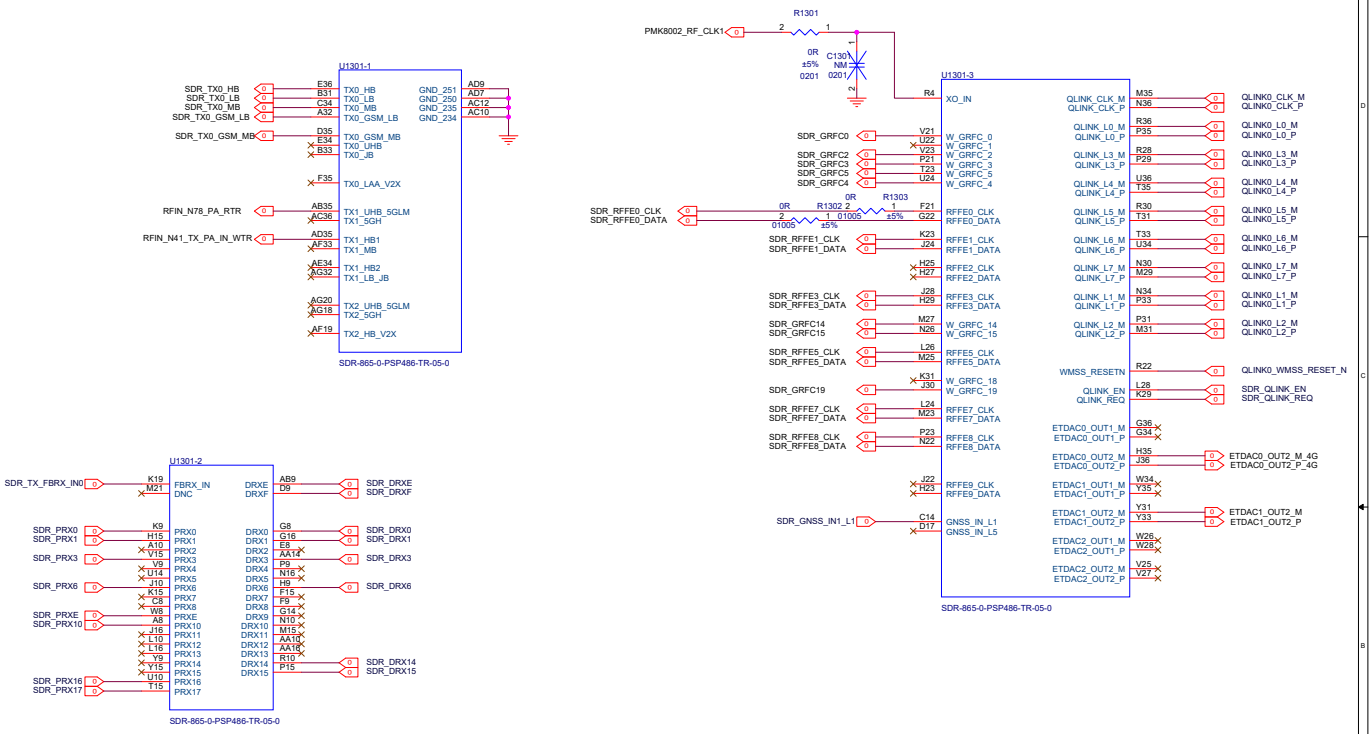

Title	K81A_TEST_BOARD		
Size A3	Document Number PM8550B Charger		Rev
Date: Thursday, May 27, 2021		Sheet 13	

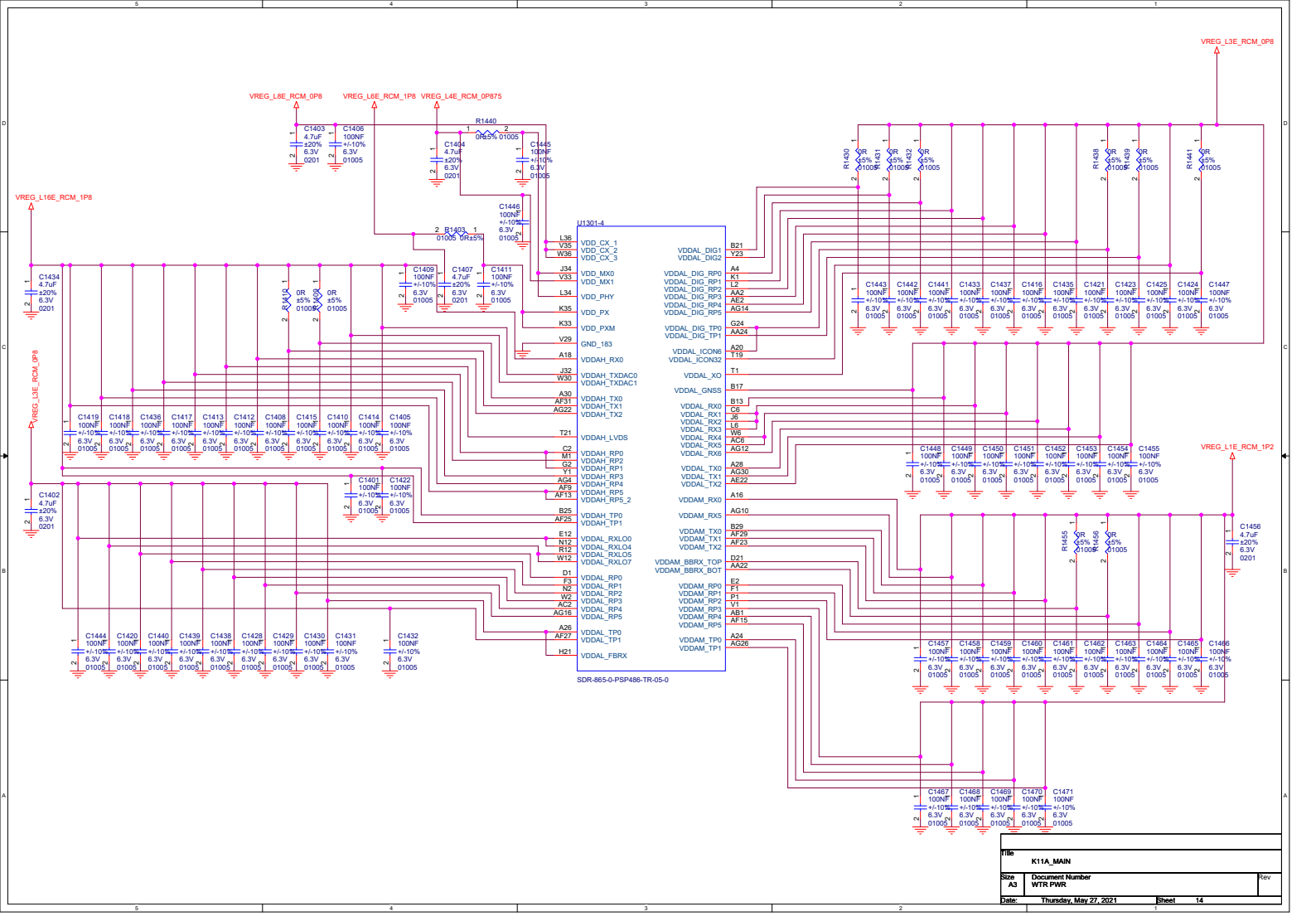

Title	K11A_MAIN		
Size A3	Document Number WTR PWR		Rev
Date:	Thursday, May 27, 2021	Sheet	14

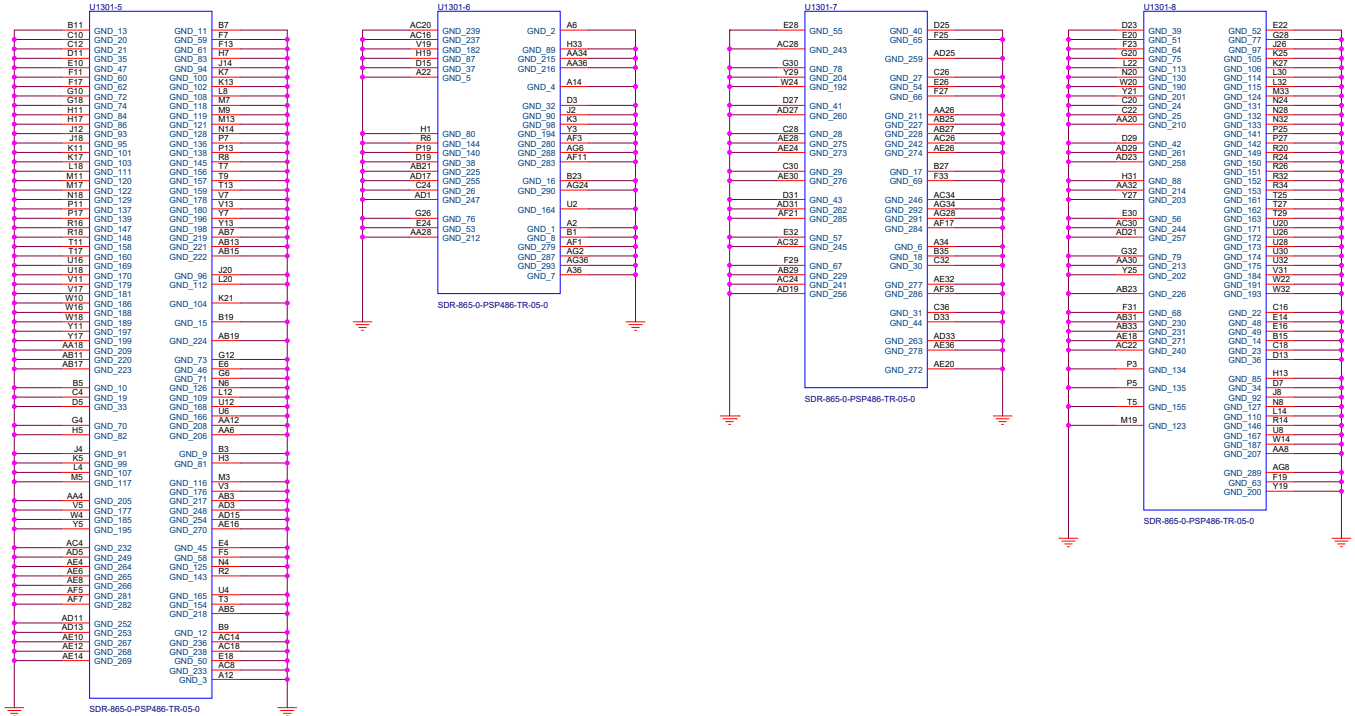

Title	K11A_MAIN	
Size A3	Document Number Reserved(for WTR)	Rev
Date: Thursday, May 27, 2021	Sheet 15	

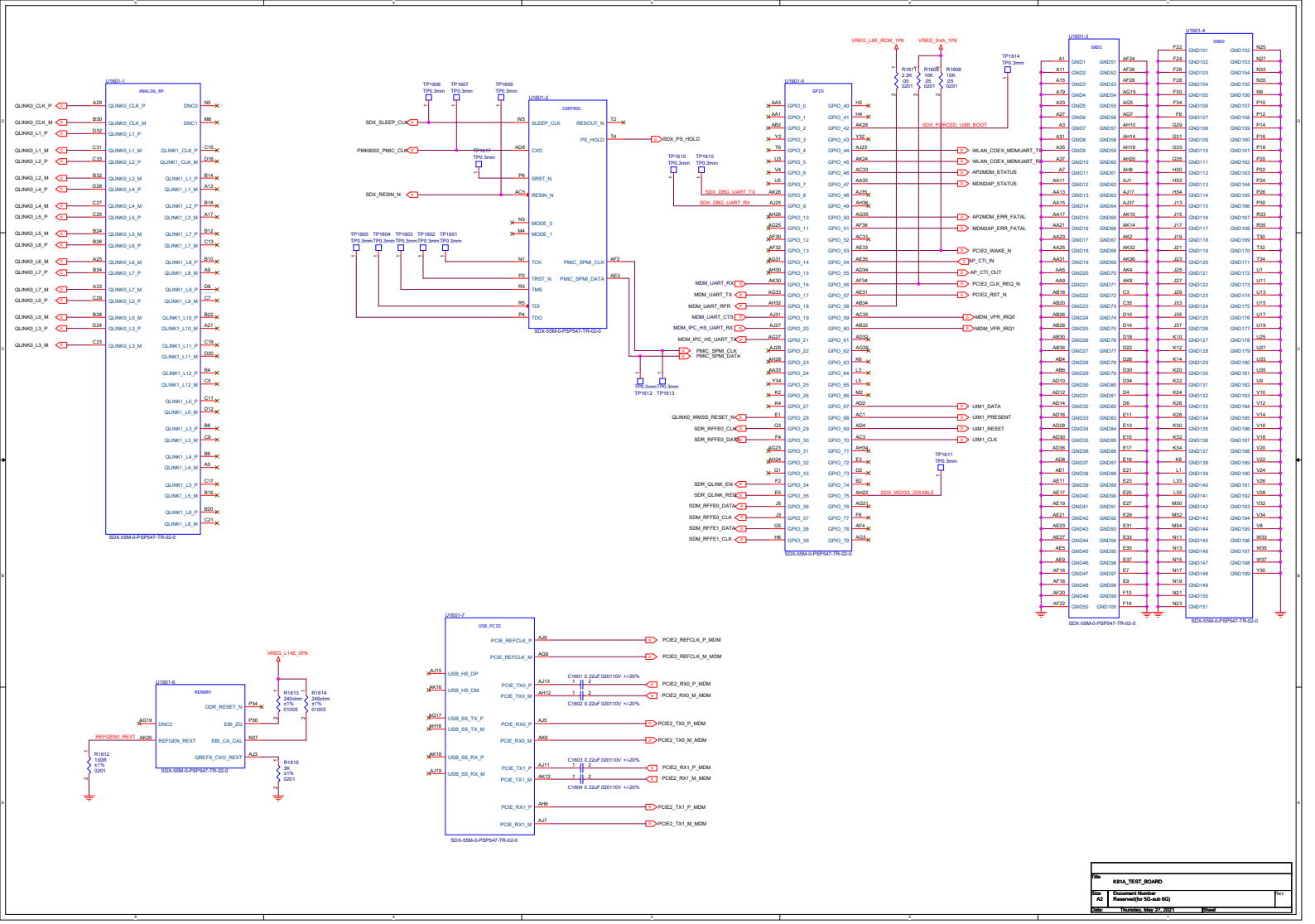

File	K81A_TEST_BOARD
Size A2	Document Number Reserved(for 5G-sub 6G)
Rev	
Date Thursday, May 27, 2021	Sheet

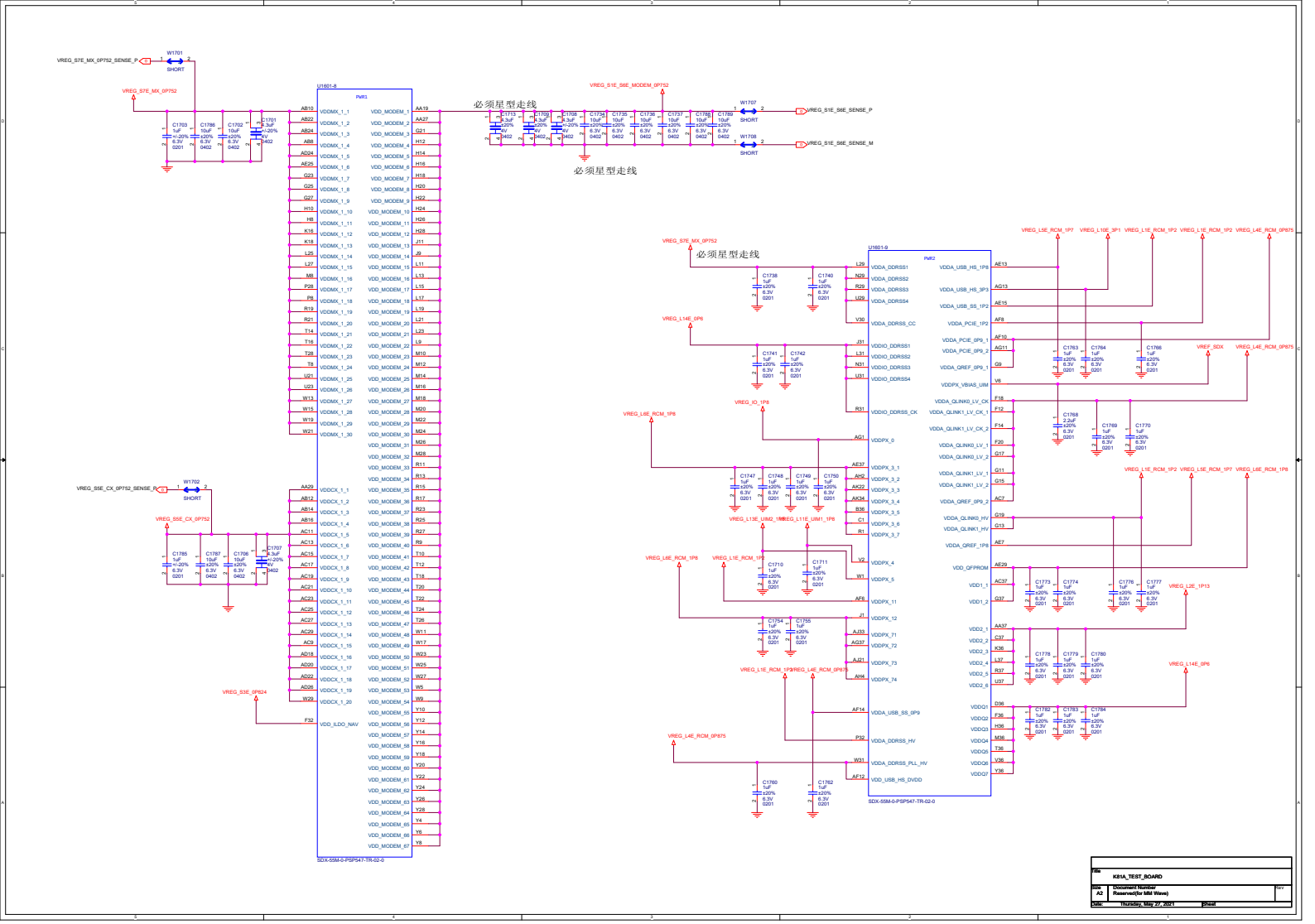
VREG_S7E_MX_0P752_SENSE_P
W1701
SHORT
VREG_S7E_MX_0P752
C1703 1uF ±20% 6.3V 0201
C1786 10uF ±20% 6.3V 0402
C1702 10uF ±20% 6.3V 0402
C1701 4.3uF ±20% 4V 0402
U1601-8
PWR1
必须星型走线
VREG_S1E_S6E_MODEM_0P752
C1713 4.3uF ±20% 4V 0402
C1759 4.3uF ±20% 4V 0402
C1708 4.3uF ±20% 4V 0402
C1734 10uF ±20% 6.3V 0402
C1735 10uF ±20% 6.3V 0402
C1738 10uF ±20% 6.3V 0402
C1737 10uF ±20% 6.3V 0402
C1788 10uF ±20% 6.3V 0402
C1789 10uF ±20% 6.3V 0402
W1707
SHORT
W1708
SHORT
VREG_S1E_S6E_SENSE_P
VREG_S1E_S6E_SENSE_M
必须星型走线
VREG_S5E_CX_0P752_SENSE_P
W1702
SHORT
VREG_S5E_CX_0P752
C1785 1uF ±20% 6.3V 0201
C1787 10uF ±20% 6.3V 0402
C1706 10uF ±20% 6.3V 0402
C1707 4.3uF ±20% 4V 0402
VREG_S3E_0P624
VDDMX_1_1
VDDMX_1_2
VDDMX_1_3
VDDMX_1_4
VDDMX_1_5
VDDMX_1_6
VDDMX_1_7
VDDMX_1_8
VDDMX_1_9
VDDMX_1_10
VDDMX_1_11
VDDMX_1_12
VDDMX_1_13
VDDMX_1_14
VDDMX_1_15
VDDMX_1_16
VDDMX_1_17
VDDMX_1_18
VDDMX_1_19
VDDMX_1_20
VDDMX_1_21
VDDMX_1_22
VDDMX_1_23
VDDMX_1_24
VDDMX_1_25
VDDMX_1_26
VDDMX_1_27
VDDMX_1_28
VDDMX_1_29
VDDMX_1_30
VDDCX_1_1
VDDCX_1_2
VDDCX_1_3
VDDCX_1_4
VDDCX_1_5
VDDCX_1_6
VDDCX_1_7
VDDCX_1_8
VDDCX_1_9
VDDCX_1_10
VDDCX_1_11
VDDCX_1_12
VDDCX_1_13
VDDCX_1_14
VDDCX_1_15
VDDCX_1_16
VDDCX_1_17
VDDCX_1_18
VDDCX_1_19
VDDCX_1_20
VDD_ILDO_NAV
VDD_MODEM_1
VDD_MODEM_2
VDD_MODEM_3
VDD_MODEM_4
VDD_MODEM_5
VDD_MODEM_6
VDD_MODEM_7
VDD_MODEM_8
VDD_MODEM_9
VDD_MODEM_10
VDD_MODEM_11
VDD_MODEM_12
VDD_MODEM_13
VDD_MODEM_14
VDD_MODEM_15
VDD_MODEM_16
VDD_MODEM_17
VDD_MODEM_18
VDD_MODEM_19
VDD_MODEM_20
VDD_MODEM_21
VDD_MODEM_22
VDD_MODEM_23
VDD_MODEM_24
VDD_MODEM_25
VDD_MODEM_26
VDD_MODEM_27
VDD_MODEM_28
VDD_MODEM_29
VDD_MODEM_30
VDD_MODEM_31
VDD_MODEM_32
VDD_MODEM_33
VDD_MODEM_34
VDD_MODEM_35
VDD_MODEM_36
VDD_MODEM_37
VDD_MODEM_38
VDD_MODEM_39
VDD_MODEM_40
VDD_MODEM_41
VDD_MODEM_42
VDD_MODEM_43
VDD_MODEM_44
VDD_MODEM_45
VDD_MODEM_46
VDD_MODEM_47
VDD_MODEM_48
VDD_MODEM_49
VDD_MODEM_50
VDD_MODEM_53
VDD_MODEM_52
VDD_MODEM_53
VDD_MODEM_54
VDD_MODEM_55
VDD_MODEM_56
VDD_MODEM_57
VDD_MODEM_58
VDD_MODEM_59
VDD_MODEM_60
VDD_MODEM_61
VDD_MODEM_62
VDD_MODEM_63
VDD_MODEM_64
VDD_MODEM_65
VDD_MODEM_66
VDD_MODEM_67
SDX-55M-0-PSP547-TR-02-0
VREG_S7E_MX_0P752
必须星型走线
C1738 1uF ±20% 6.3V 0201
C1740 1uF ±20% 6.3V 0201
VREG_L14E_0P6
C1741 1uF ±20% 6.3V 0201
C1742 1uF ±20% 6.3V 0201
VREG_IO_1P8
VREG_L6E_RCM_1P8
C1747 1uF ±20% 6.3V 0201
C1748 1uF ±20% 6.3V 0201
C1749 1uF ±20% 6.3V 0201
C1750 1uF ±20% 6.3V 0201
VREG_L13E_UIM2_1P8
VREG_L11E_UIM1_1P8
VREG_L6E_RCM_1P8
VREG_L1E_RCM_1P8
C1710 1uF ±20% 6.3V 0201
C1711 1uF ±20% 6.3V 0201
C1754 1uF ±20% 6.3V 0201
C1755 1uF ±20% 6.3V 0201
VREG_L1E_RCM_1P2
VREG_L4E_RCM_0P875
VREG_L4E_RCM_0P875
C1760 1uF ±20% 6.3V 0201
C1762 1uF ±20% 6.3V 0201
U1601-9
PWR2
VDDA_DDRSS1
VDDA_DDRSS2
VDDA_DDRSS3
VDDA_DDRSS4
VDDA_DDRSS_CC
VDDIO_DDRSS1
VDDIO_DDRSS2
VDDIO_DDRSS3
VDDIO_DDRSS4
VDDIO_DDRSS_CK
VDDPX_0
VDDPX_3_1
VDDPX_3_2
VDDPX_3_3
VDDPX_3_4
VDDPX_3_5
VDDPX_3_6
VDDPX_3_7
VDDPX_4
VDDPX_5
VDDPX_11
VDDPX_12
VDDPX_71
VDDPX_72
VDDPX_73
VDDPX_74
VDDA_USB_SS_0P9
VDDA_DDRSS_HV
VDDA_DDRSS_PLL_HV
VDD_USB_HS_DVDD
SDX-55M-0-PSP547-TR-02-0
VDDA_USB_HS_1P8
VDDA_USB_HS_3P3
VDDA_USB_SS_1P2
VDDA_PCIE_1P2
VDDA_PCIE_0P9_1
VDDA_PCIE_0P9_2
VDDA_QREF_0P9_1
VDDPX_VBIAS_UIM
VDDA_QLINK0_LV_CK
VDDA_QLINK1_LV_CK_1
VDDA_QLINK1_LV_CK_2
VDDA_QLINK0_LV_1
VDDA_QLINK0_LV_2
VDDA_QLINK1_LV_1
VDDA_QLINK1_LV_2
VDDA_QREF_0P9_2
VDDA_QLINK0_HV
VDDA_QLINK1_HV
VDDA_QREF_1P8
VDD_QFPROM
VDD1_1
VDD1_2
VDD2_1
VDD2_2
VDD2_3
VDD2_4
VDD2_5
VDD2_6
VDD3_1
VDD3_2
VDD3_3
VDD3_4
VDD3_5
VDD3_6
VDD3_7
VREG_L5E_RCM_1P7
VREG_L10E_3P1
VREG_L1E_RCM_1P2
VREG_L1E_RCM_1P2
VREG_L4E_RCM_0P875
VREF_SDX
VREG_L4E_RCM_0P875
C1763 1uF ±20% 6.3V 0201
C1764 1uF ±20% 6.3V 0201
C1766 1uF ±20% 6.3V 0201
C1768 2.2uF ±20% 6.3V 0201
C1769 1uF ±20% 6.3V 0201
C1770 1uF ±20% 6.3V 0201
VREG_L1E_RCM_1P2
VREG_L5E_RCM_1P7
VREG_L6E_RCM_1P8
C1773 1uF ±20% 6.3V 0201
C1774 1uF ±20% 6.3V 0201
C1776 1uF ±20% 6.3V 0201
C1777 1uF ±20% 6.3V 0201
VREG_L2E_1P13
C1778 1uF ±20% 6.3V 0201
C1779 1uF ±20% 6.3V 0201
C1780 1uF ±20% 6.3V 0201
VREG_L14E_0P6
C1782 1uF ±20% 6.3V 0201
C1783 1uF ±20% 6.3V 0201
C1784 1uF ±20% 6.3V 0201
File
K81A_TEST_BOARD
Size
A2
Document Number
Reserved(for MM Wave)
Rev
Date:
Thursday, May 27, 2021
Sheet

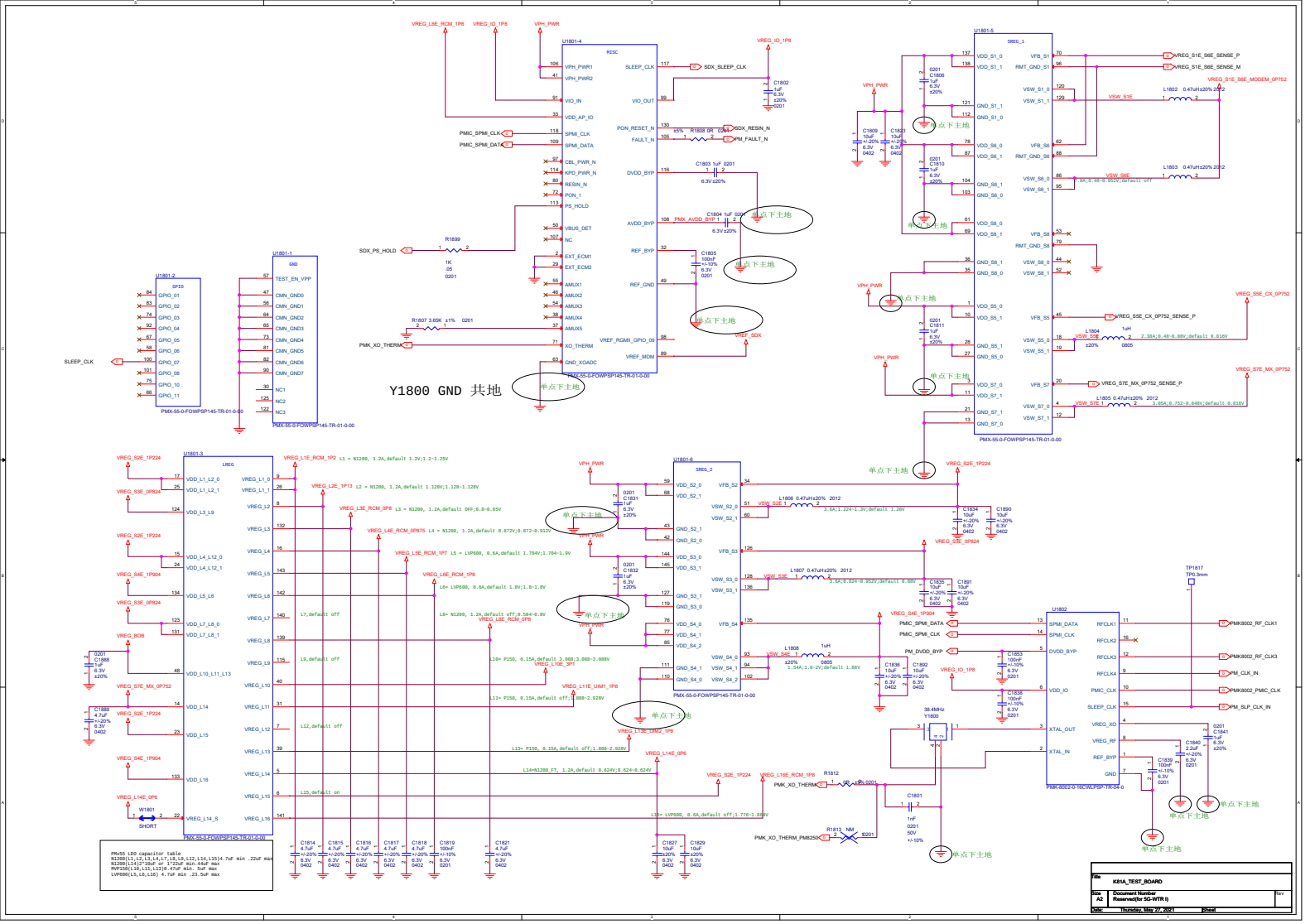

Title	K81A_TEST_BOARD
Size A2	Document Number Reserved(for 5G-WTR I)
Rev	
Date: Thursday, May 27, 2021	Sheet

N78 LPAF VC7530

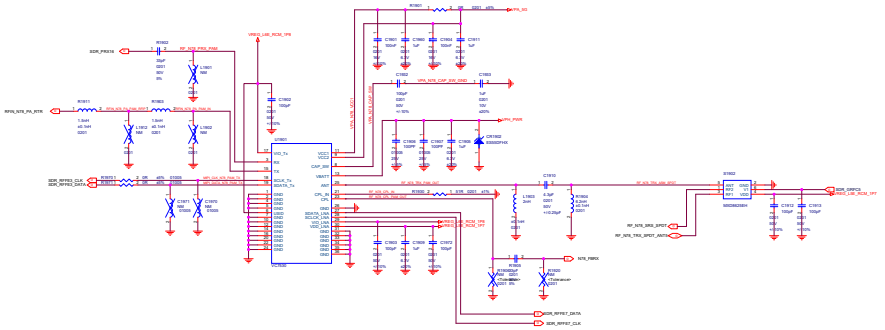

N78 SRS SP4T MXD8645M

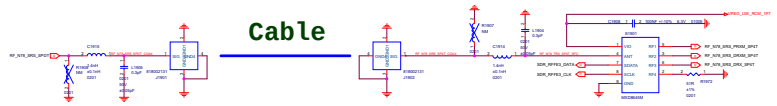

N78 SRS PRXM

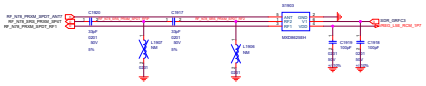

N78 SRS DRX

N78 SRS DRXM

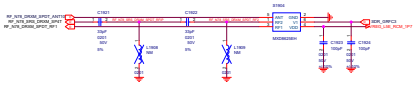

Same GRFC:GRFC3

Title	RF7A_TEST_BOARD
Size	A1
Document Number	RF8TPL
Rev	
Date	Thursday, July 7, 2022
Sheet	

N78 PRXM LFEM QDM5677

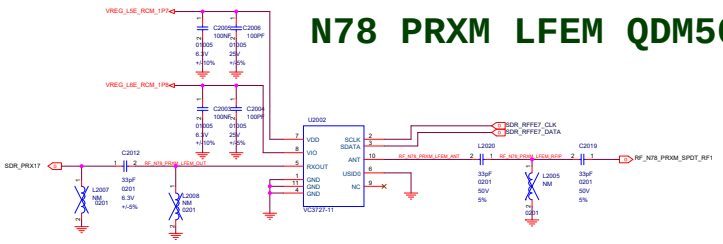

N78 DRX LFEM QDM5677

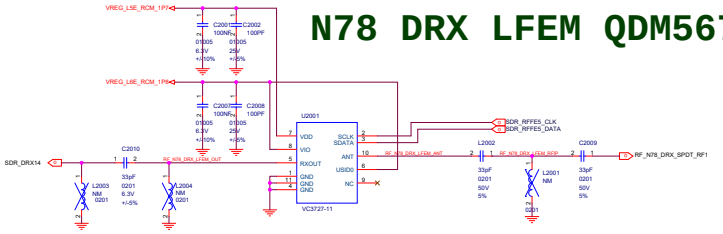

N78 DRXM LFEM QDM5677

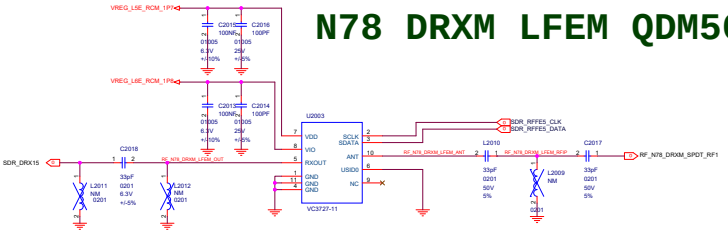

Title	K81A_TEST_BOARD	
Size A2	Document Number PM8550B Charger	Rev
Date: Thursday, May 27, 2021	Sheet	

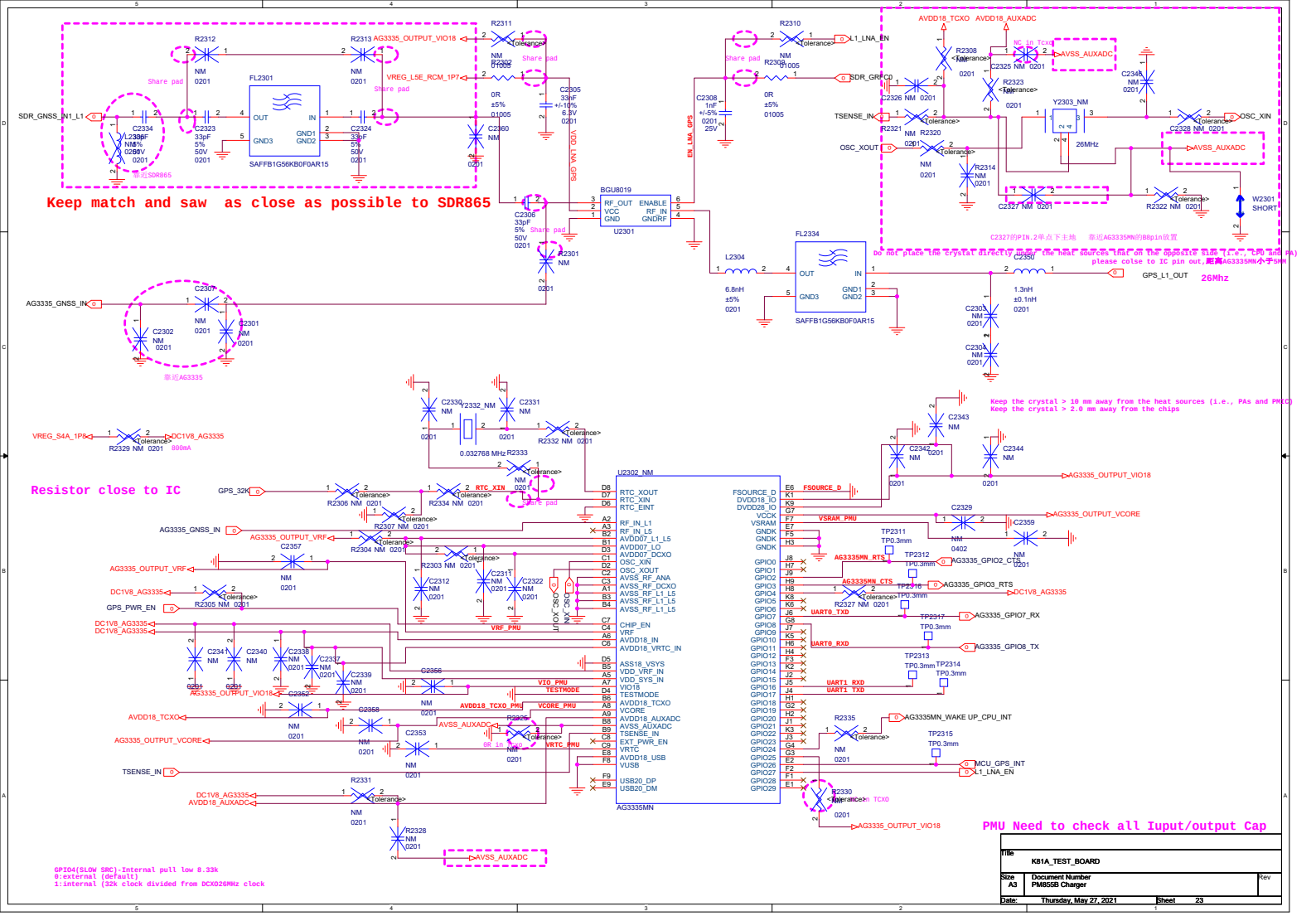
Keep match and saw as close as possible to SDR865
Resistor close to IC
PMU Need to check all Iuput/output Cap
26Mhz
Do not place the crystal directly above the heat sources that are on the opposite side (i.e., PMU and PA)
please colse to IC pin out,距离AG3335MN小于5MM
Keep the crystal > 10 mm away from the heat sources (i.e., PAs and PMCC)
Keep the crystal > 2.0 mm away from the chips
GPIO4(SLOW SRC)-Internal pull low 8.33k
0:external (default)
1:internal (32k clock divided from DCXO26MHz clock
FL2301
SAFFB1G56KB0F0AR15
BGU8019
U2301
FL2334
U2302_NM
AG3335MN
Title
K81A_TEST_BOARD
Size
A3
Document Number
PM855B Charger
Rev
Date:
Thursday, May 27, 2021
Sheet
23

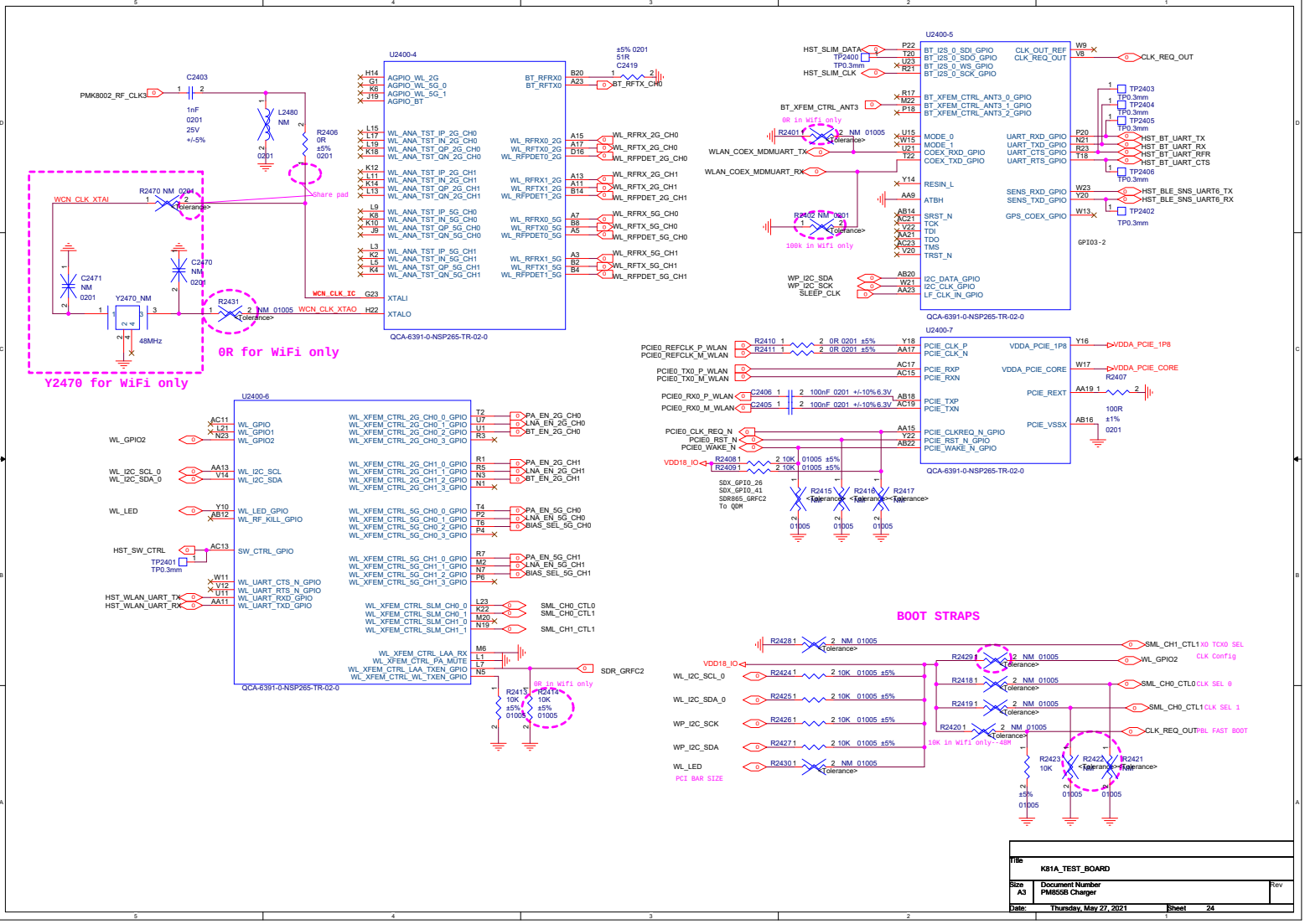
U2400-4
QCA-6391-0-NSP265-TR-02-0
U2400-5
QCA-6391-0-NSP265-TR-02-0
U2400-7
QCA-6391-0-NSP265-TR-02-0
U2400-6
QCA-6391-0-NSP265-TR-02-0
Y2470 for WiFi only
0R for WiFi only
BOOT STRAPS
Title
K81A_TEST_BOARD
Size
A3
Document Number
PM8855B Charger
Rev
Date:
Thursday, May 27, 2021
Sheet
24

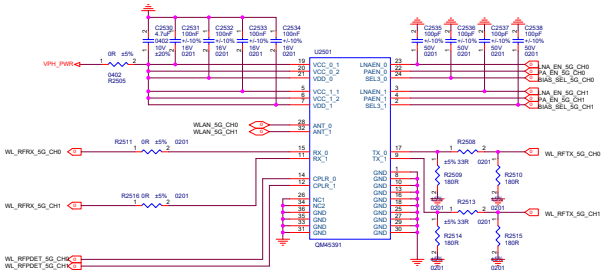

WLAN FEM 5G

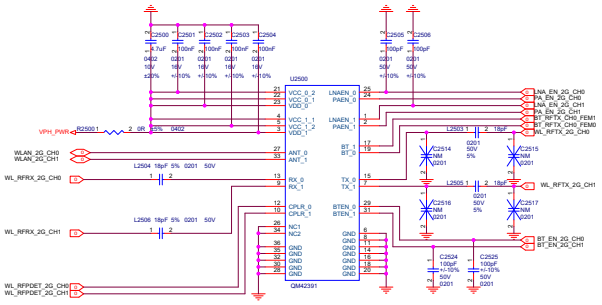

WLAN FEM 2.4G

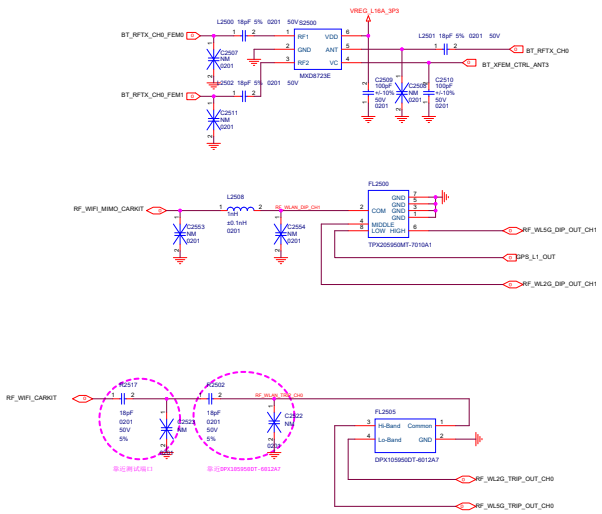

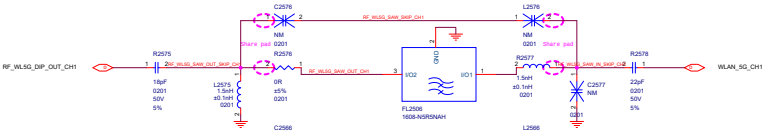

WLAN CH1

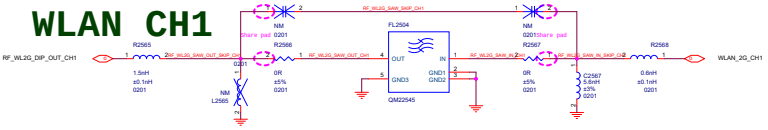

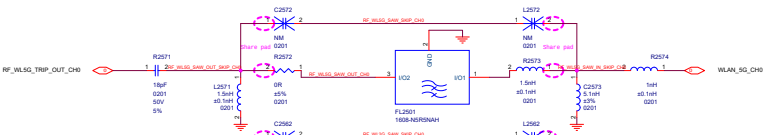

WLAN CH0

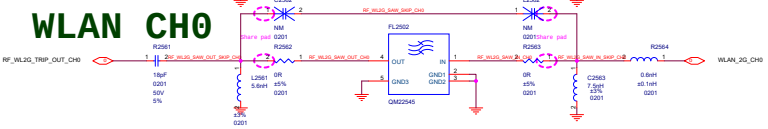

Title	K81A_TEST_BOARD
Size A2	Document Number PM8058 Charger
Rev	
Date: Thursday, May 27, 2021	Sheet

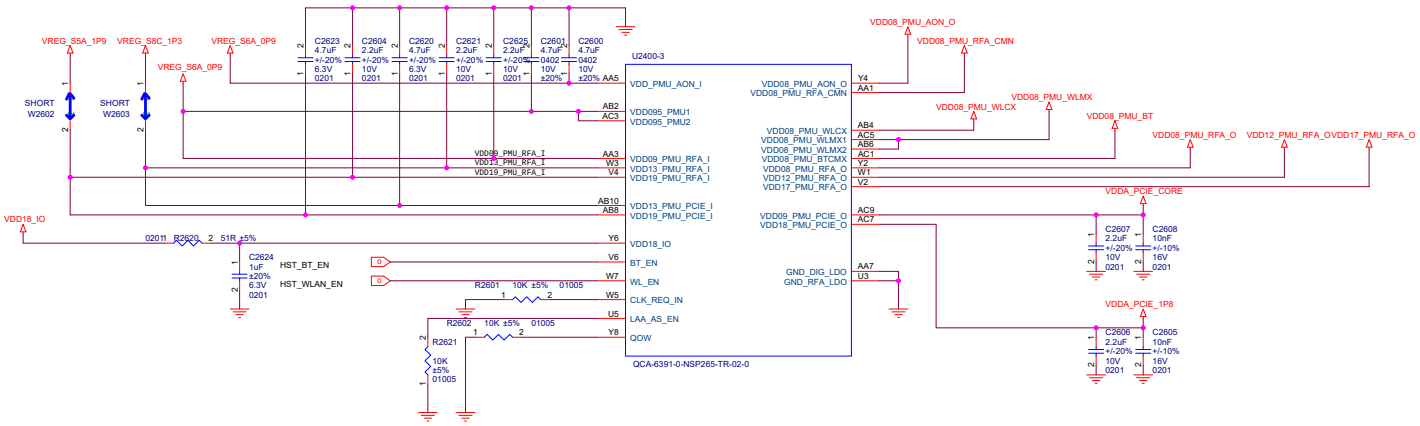

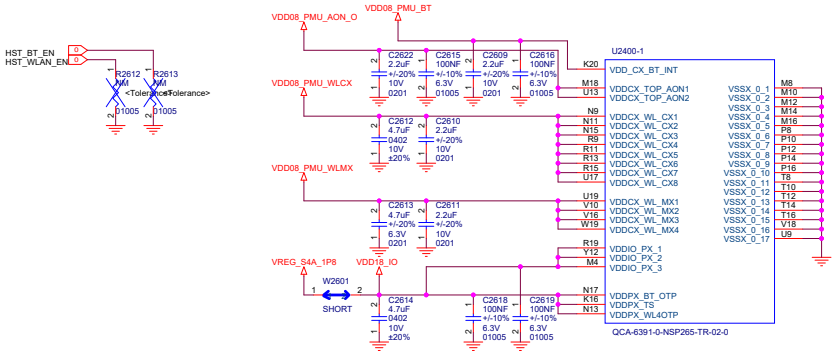

Title	K81A_TEST_BOARD		
Size A3	Document Number PM8550B Charger		Rev
Date: Thursday, May 27, 2021		Sheet 26	

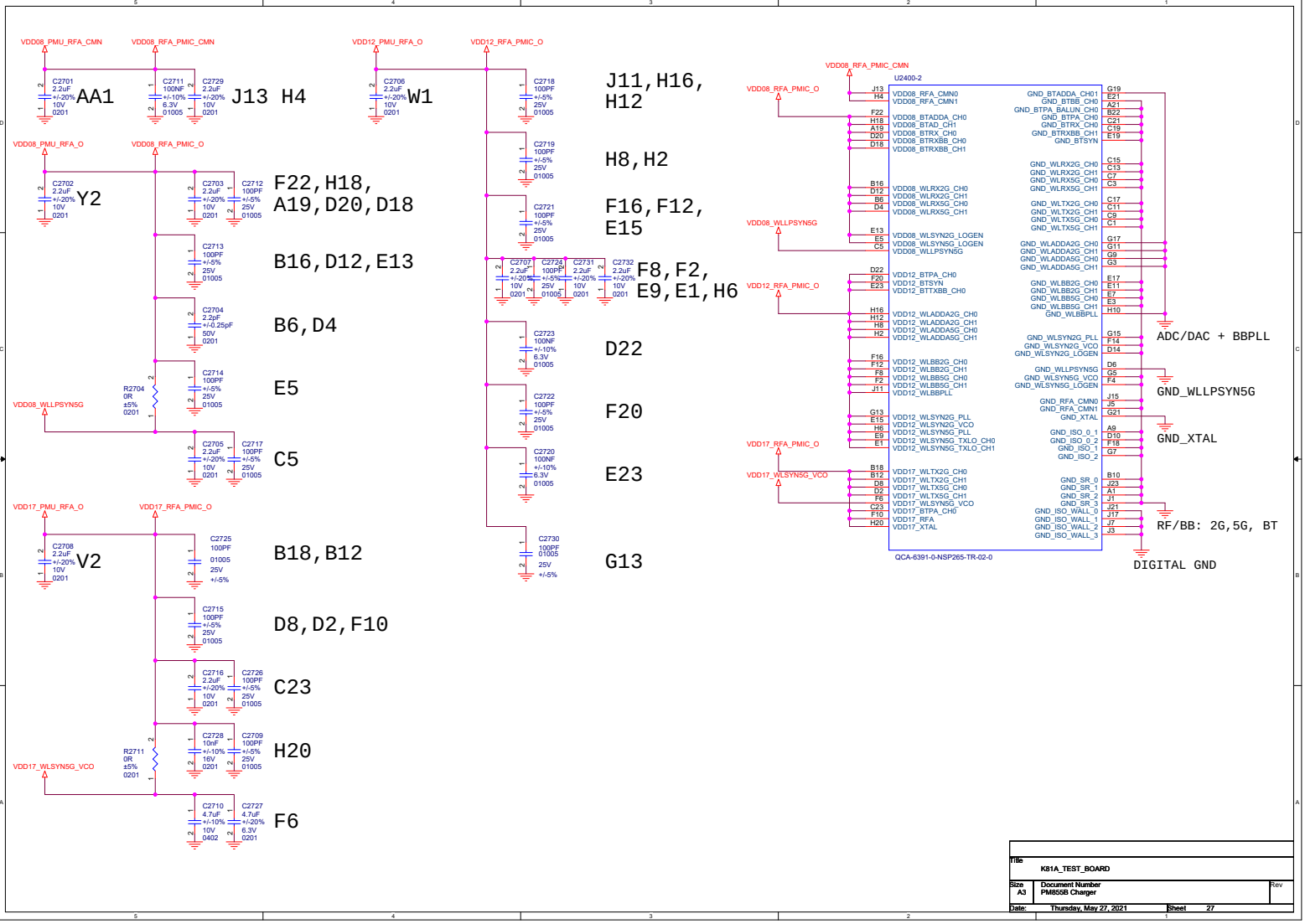

Title	K81A_TEST_BOARD	
Size A3	Document Number PM855B Charger	Rev
Date: Thursday, May 27, 2021	Sheet 27	

ANT6 WIFI1

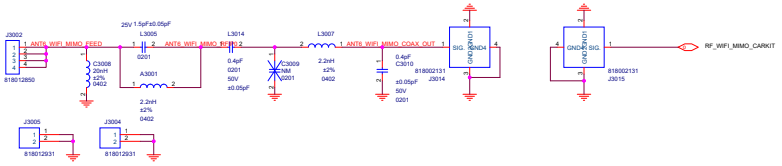

ANT3

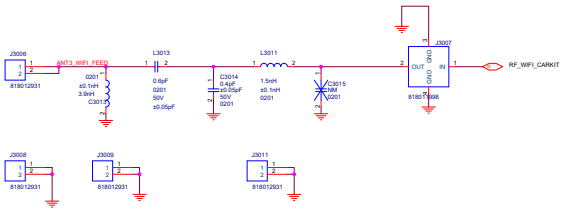

Title	K81A_TEST_BOARD
Size A2	Document Number PM8058 Charger
Rev	
Date: Thursday, May 27, 2021	Sheet

We use current SM8250 symbol as LP5 PKG, and it can be compatible with LP4x PKG

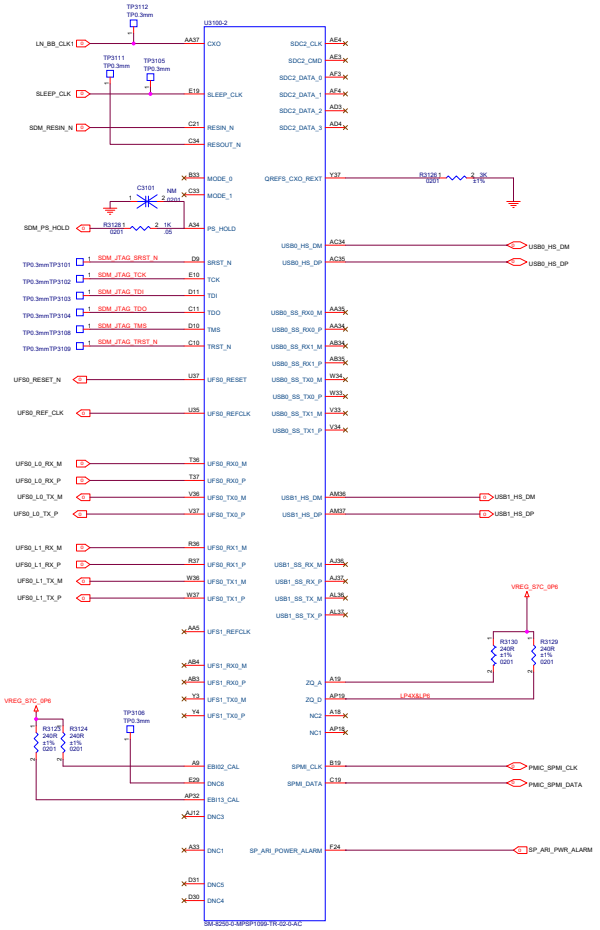

LP5 DNI R3135/R3136, MOUNT R3130,R3129

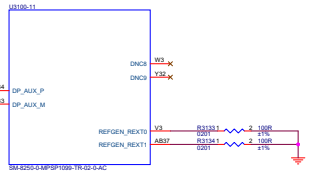

Title	K81A_TEST_BOARD		
Size A2	Document Number SDM855 Control		Rev
Date: Thursday, May 27, 2021		Sheet	

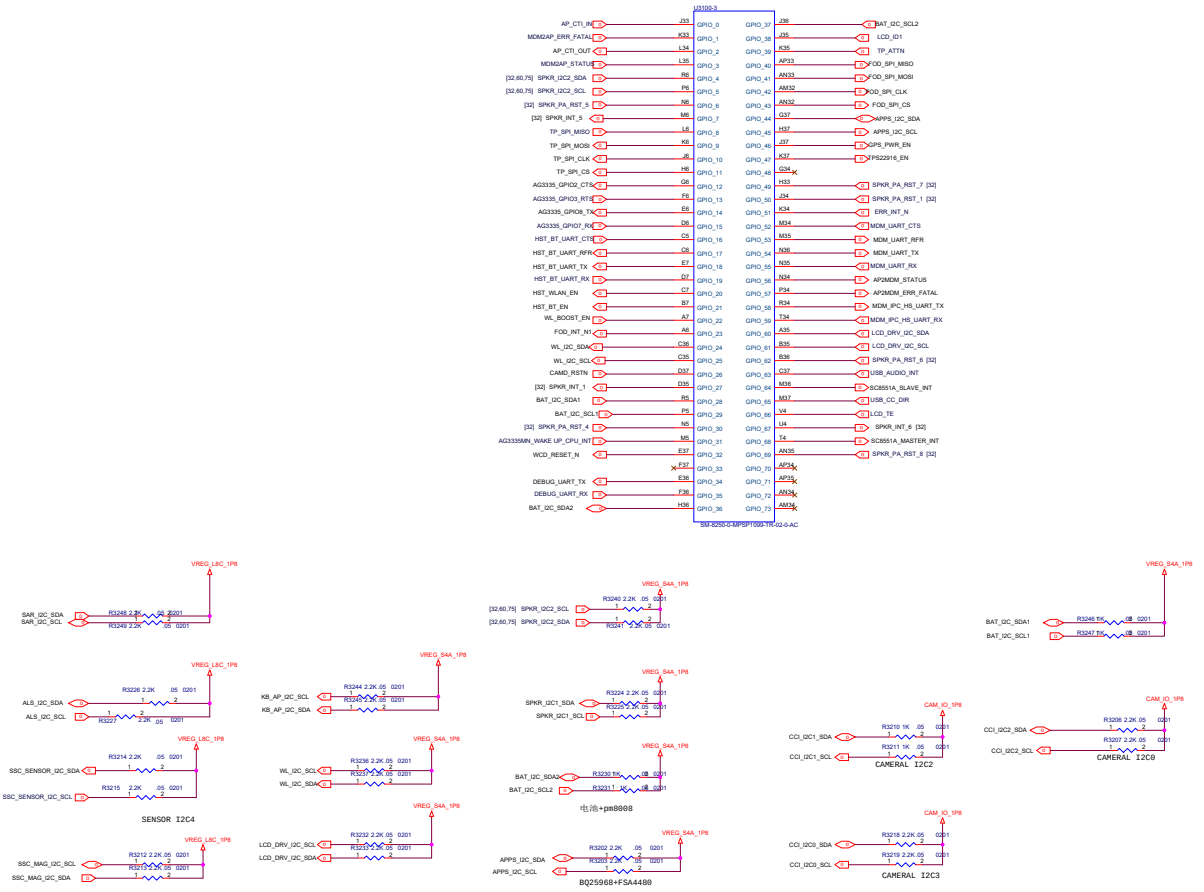

Title	K81A_TEST_BOARD		
Size A2	Document Number SDM855 GPIO-1		Rev
Date: Thursday, May 27, 2021		Sheet	

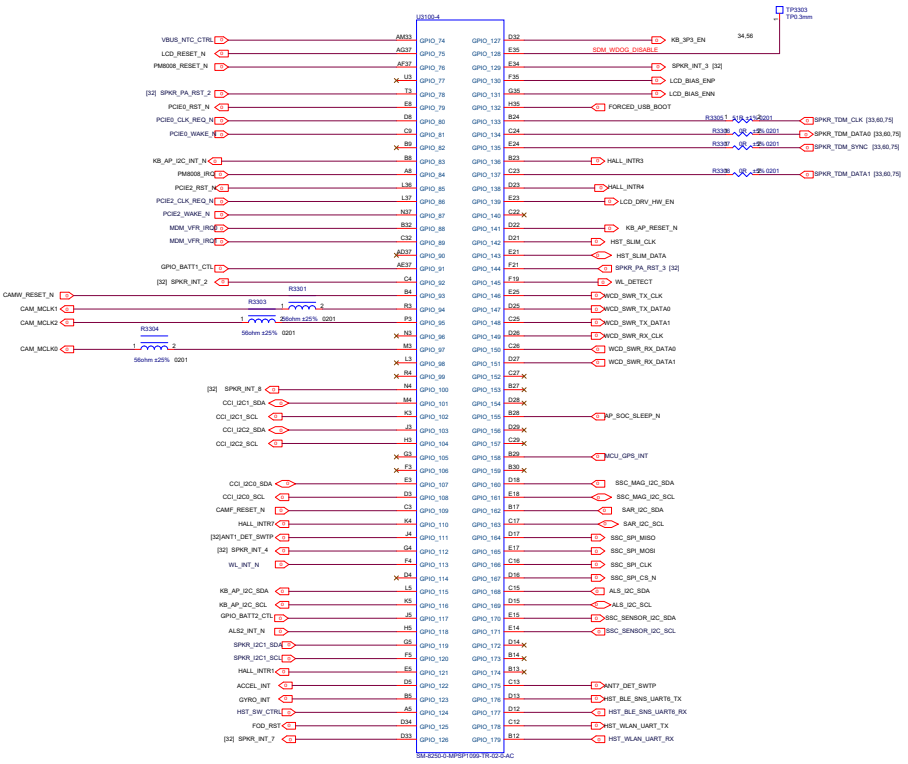

Title	K81A_TEST_BOARD		
Size A2	Document Number SDM855 GPIO-2		Rev
Date: Thursday, May 27, 2021		Sheet	

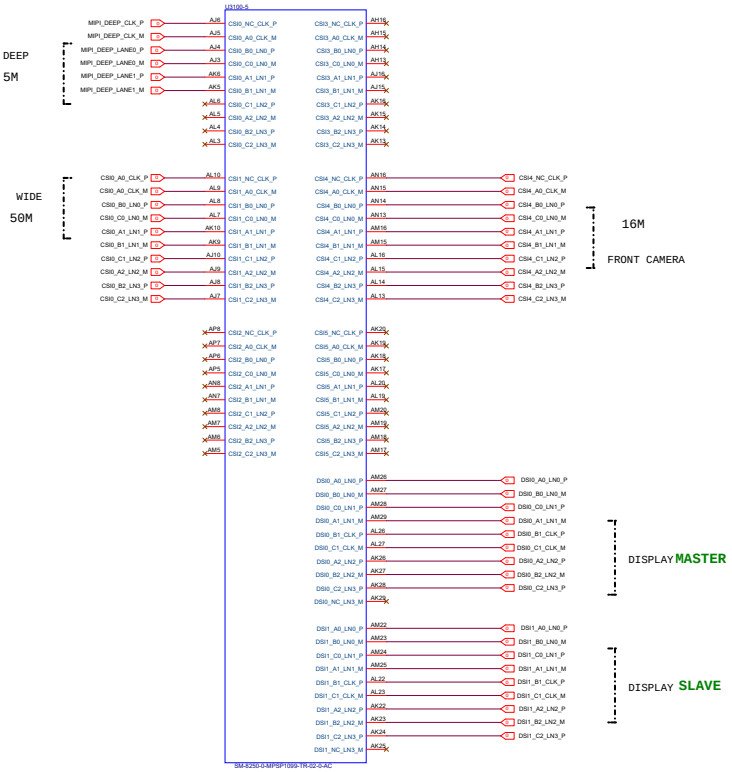

Title	K81A_TEST_BOARD	
Size A2	Document Number SDM855 MPN	Rev
Date: Thursday, May 27, 2021	Sheet	

Title	K81A_TEST_BOARD
Size A3	Document Number Reserved(for MIPI)
Rev	
Date:	Thursday, May 27, 2021
Sheet	

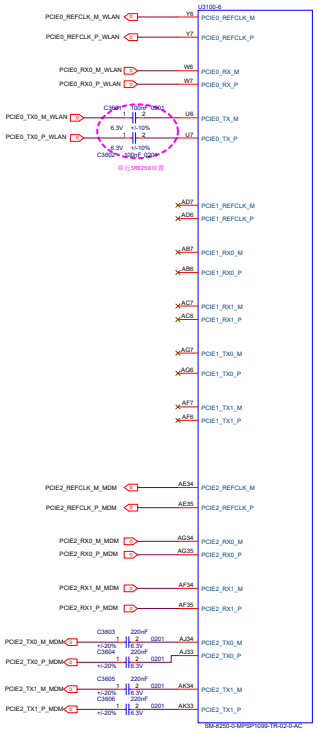

File	K81A_TEST_BOARD	
Size A2	Document Number SDM855 RF INTF	Rev
Date: Thursday, May 27, 2021	Sheet	

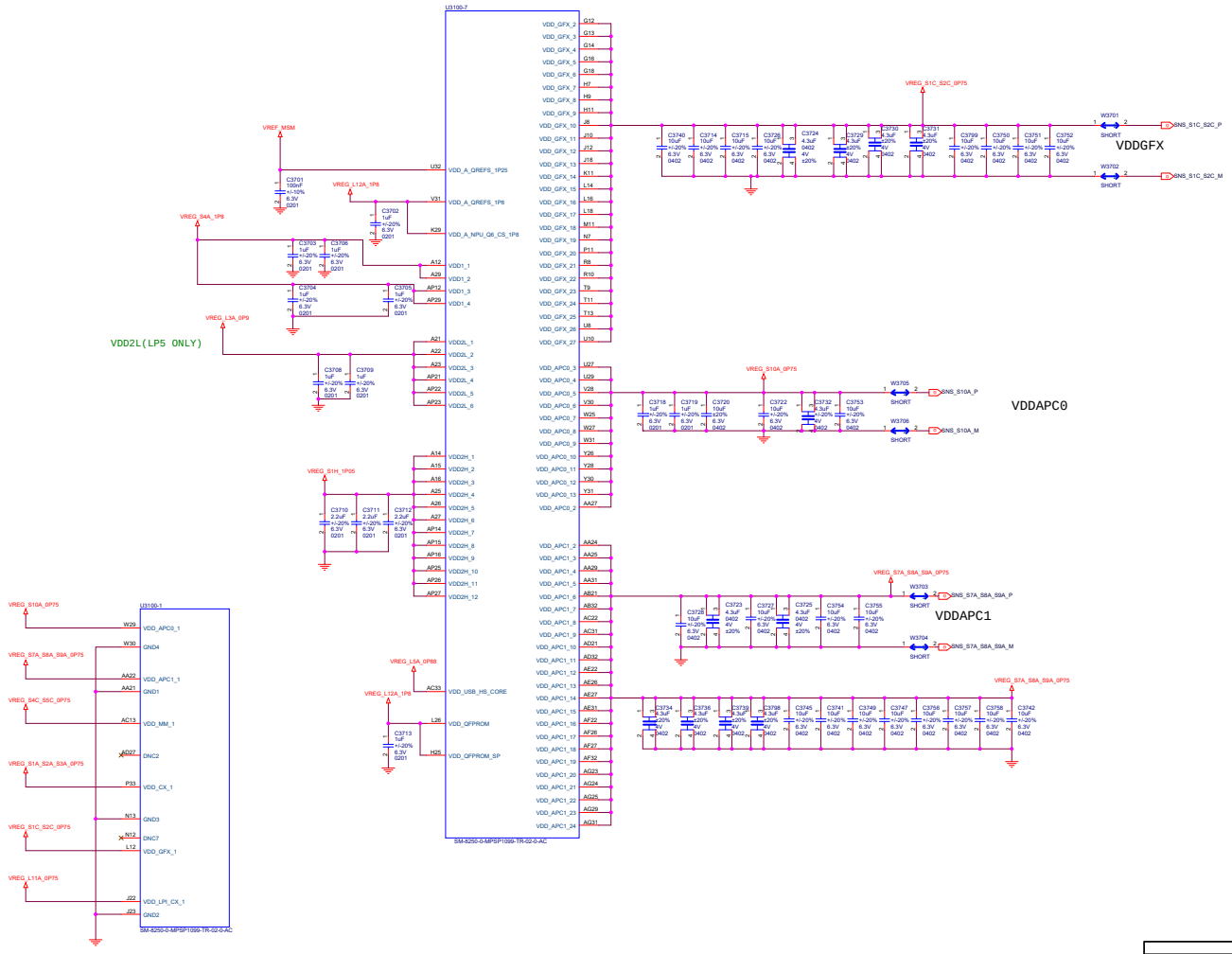

Title	K81A_TEST_BOARD
Size A2	Document Number SDM855_PWR1
Rev	
Date: Thursday, May 27, 2021	Sheet

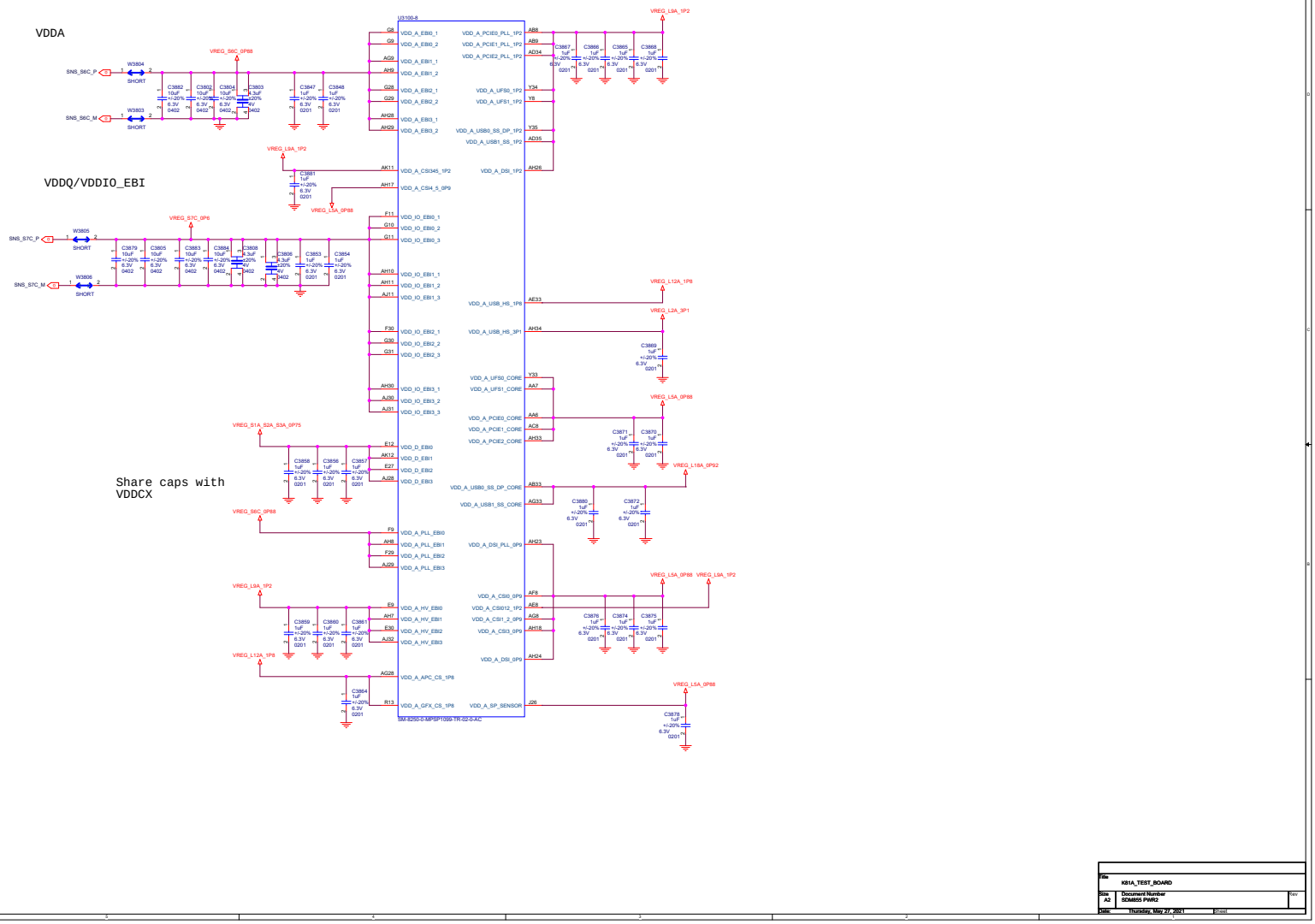

Title	K81A_TEST_BOARD
Size A2	Document Number SDM855_PWR2
Rev	
Date: Thursday, May 27, 2021	Sheet

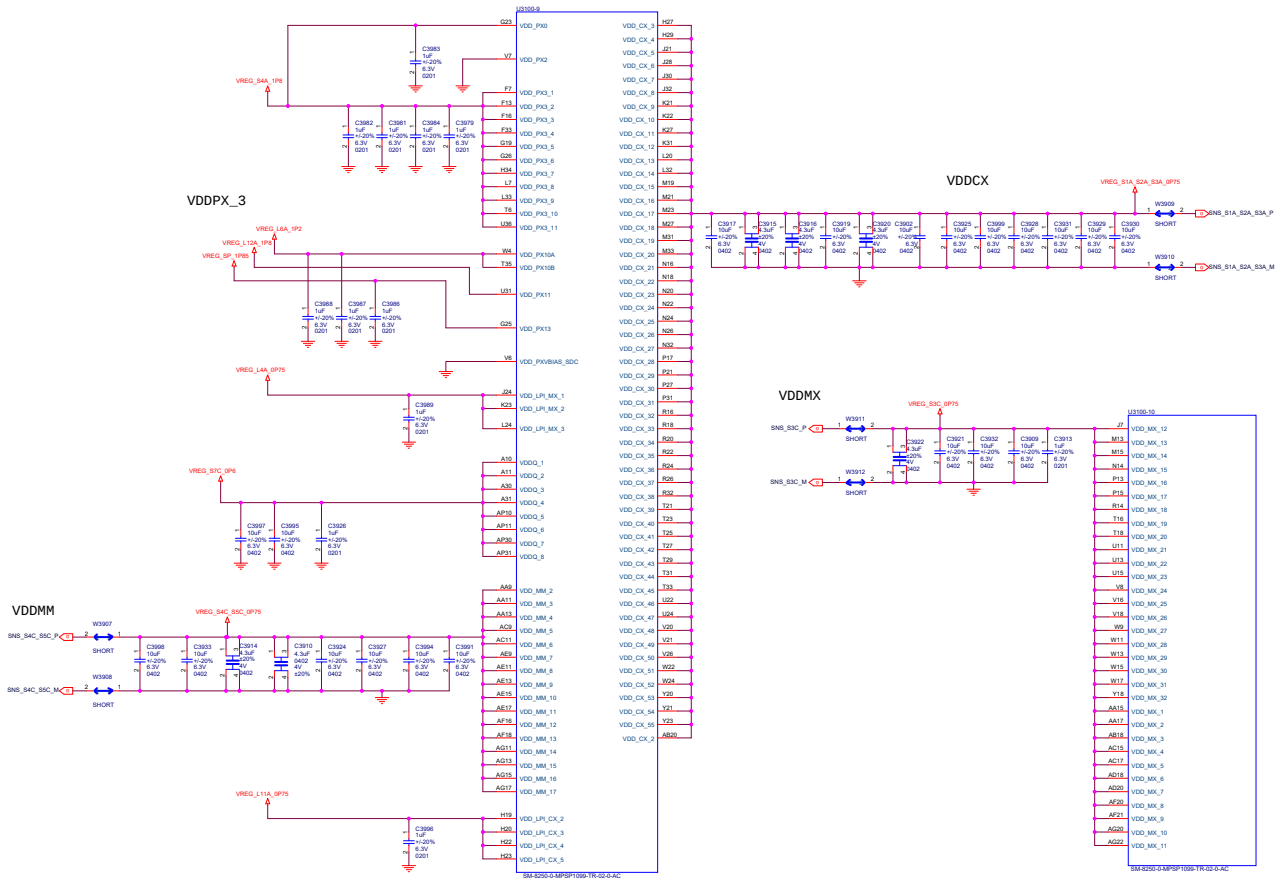

Title	K81A_TEST_BOARD
Size A2	Document Number SDM855_PWR3
Rev	
Date: Thursday, May 27, 2021	Sheet

Title	K81A_TEST_BOARD
Size A3	Document Number SDM855 PWR4
Rev	
Date:	Thursday, May 27, 2021
Sheet	

Title	K81A_TEST_BOARD	
Size A3	Document Number SDM855 GND	Rev
Date: Thursday, May 27, 2021	Sheet	

Note: Refer to 80-VP447-10 for XO Layout App Note.

Layout Note:
No trace shall be present in at-least two immediate layers below XTAL.
Route XTAL_IN and XTAL_OUT traces on surface layer only, with length between 3mm and 10mm.

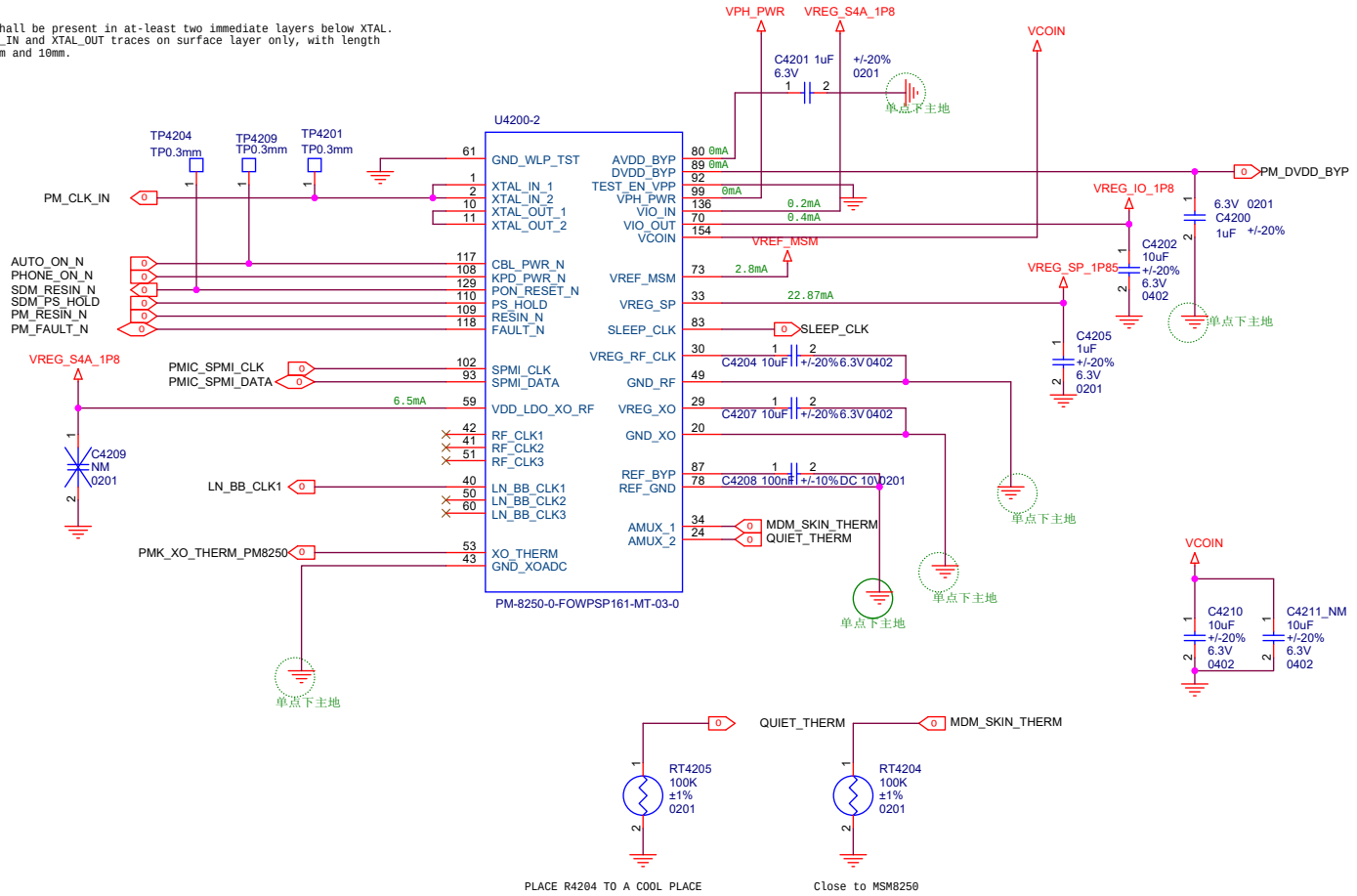

Title	K81A_TEST_BOARD	
Size A4	Document Number PM855 XO&CTRL	Rev
Date: Thursday, May 27, 2021	Sheet 43	

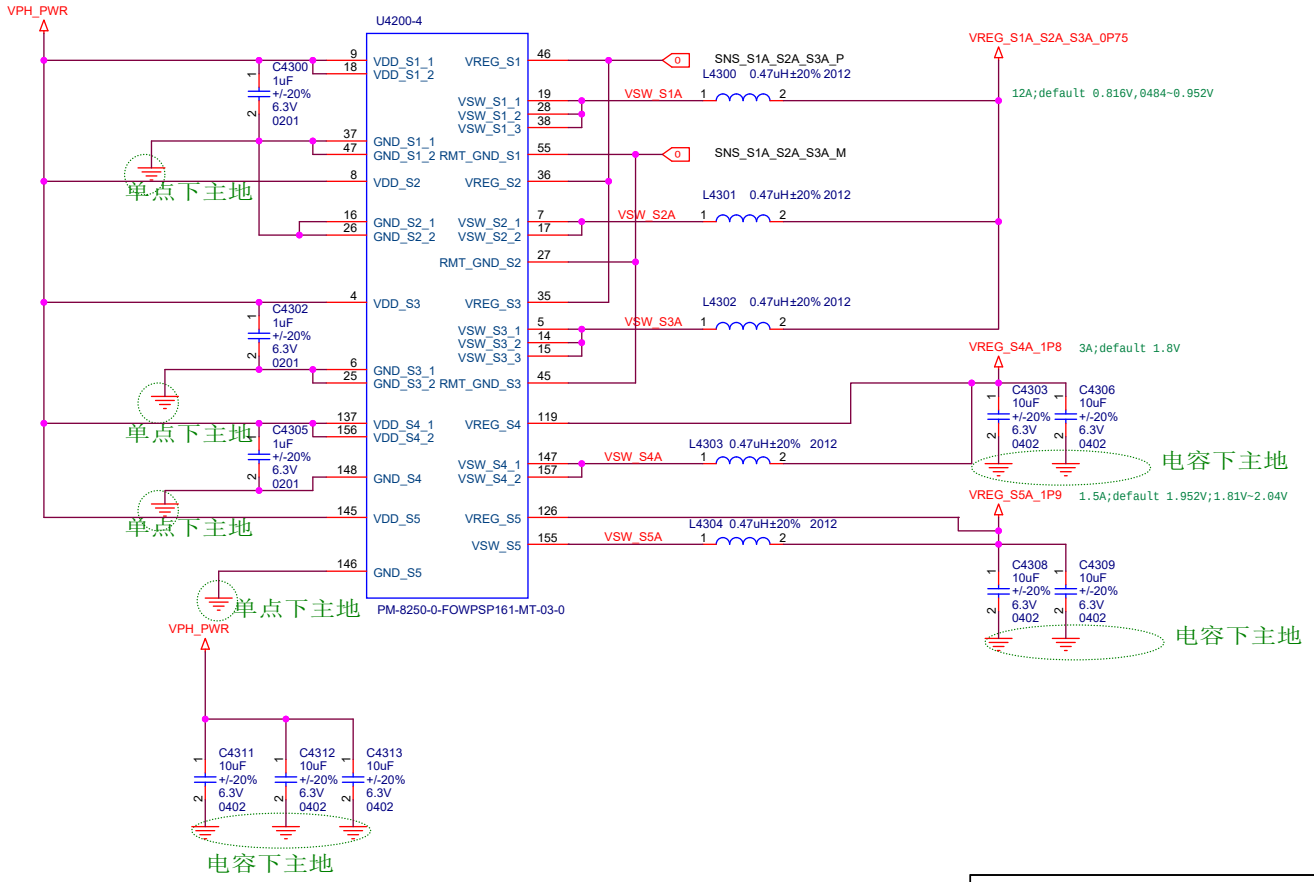

Title	K81A_TEST_BOARD	
Size A4	Document Number PM855 BUCK CONVERTER1	Rev
Date: Thursday, May 27, 2021	Sheet 44	

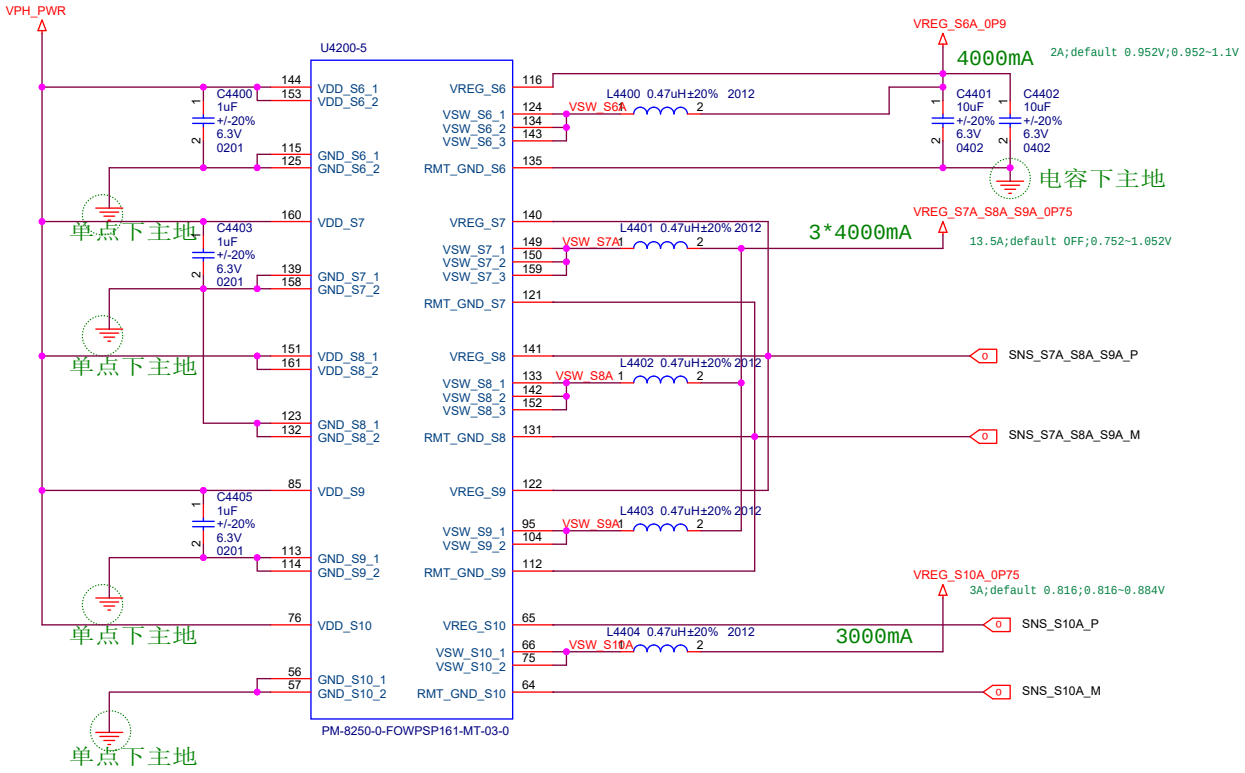

Title	K81A_TEST_BOARD	
Size A4	Document Number PM855 BUCK CONVERTER2	Rev
Date: Thursday, May 27, 2021	Sheet 45	

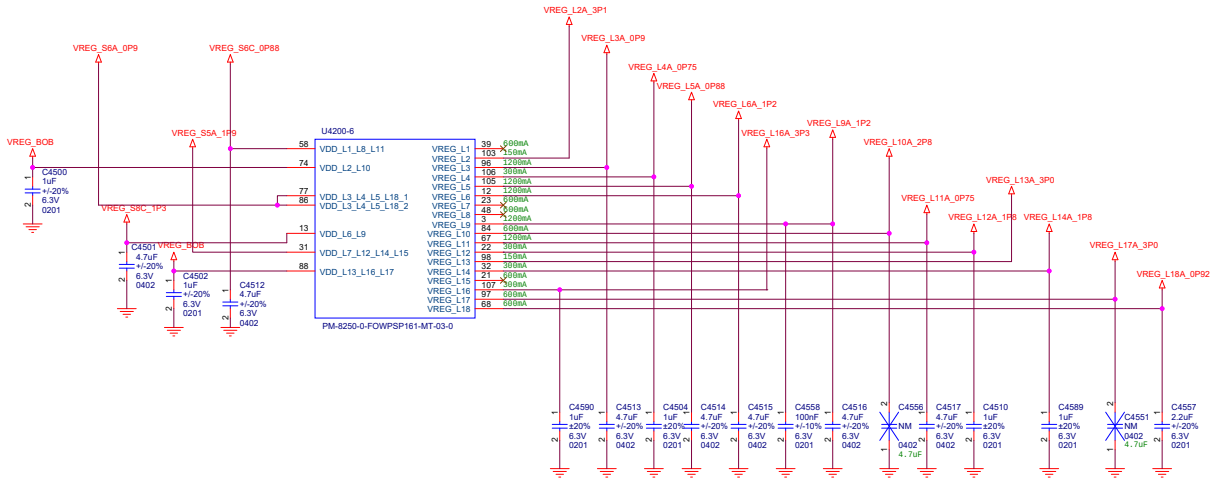

Table 3-9 PM8250 linear/low-voltage regulator summary

Regulator	Circuit type	I_{RATED} (mA) [1]	Default on booting voltage (V) [2]	Nominal voltage (V)	Active voltage minimum (V)	Active voltage maximum (V)	Expected use
L1A	LDO510 NMOS 600	600		0.752			Spare
L2A	LDO510 MV PMOS 150	150	3.072	3.072	3.072	3.072	USB
L3A	LDO510 NMOS 1200	1200	0.928	0.928			LPDDR5: VDD2L LPDDR4X: Spare
L4A	LDO510 NMOS 300	300	0.816	0.816	0.752	0.904	LPI_MX
L5A	LDO510 NMOS 1200	1200	0.88	0.88	0.88	0.88	LPI_MX
L6A	LDO510 NMOS 1200	1200	1.2	1.2	1.2	1.2	UFS VCCQ, PX_10
L7A	LDO510 LV PMOS 600	600	–	1.704			QCA6390 VDDRFA backup
L8A	LDO510 NMOS 600	600	–	0.816			Spare
L9A	LDO510 NMOS 1200	1200	1.2	1.2	1.2	1.2	1.2V VDDA for DSI, PCIE, HV EBI, USB_SS_DP, 1P2, CSI, and so on.

Table 3-9 PM8250 linear/low-voltage regulator summary (cont.)

Regulator	Circuit type	I_{RATED} (mA) [1]	Default on booting voltage (V) [2]	Nominal voltage (V)	Active voltage minimum (V)	Active voltage maximum (V)	Expected use
L10A	LDO510 MV PMOS 600	600	–	2.904			Optional DMIC Bias
L11A	LDO510 NMOS 1200	1200	0.816	0.816			LPI_CX
L12A	LDO510 LV P300	300	1.8	1.8	1.8	1.8	BBCLK, USB, UFS, QFPROM
L13A	LDO510 MV P150	150	–	3.008			FTM TSP_AVDD
L14A	LDO510 LV P300	300	–	1.8	1.8	1.8	OLED_VDDIO
L15A	LDO510 LV P600	600	–	1.704	1.704	1.704	QCA6436 VCC_1P8
L16A	LDO510 MV P300	300	–	3.024			Ext BT xPA 3p3
L17A	LDO510 MV P600	600 [3]	2.96	2.96	2.856	3.008	UFS_2L_VCC
L18A	LDO510 N600	600	0.912	0.912			USB SS core & DP core

1. Some regulators are tested and used beyond their trated limit
2. Voltages shown in the *Default on booting voltage (V)* column indicate that the regulator is enabled as part of the hardware default-on sequence.
3. VREG_L17A has been specifically validated up to 800 mA for UFS VSS support.

Title	K81A_TEST_BOARD	
Size A3	Document Number PM855 LDOs	Rev
Date: Thursday, May 27, 2021	Sheet	

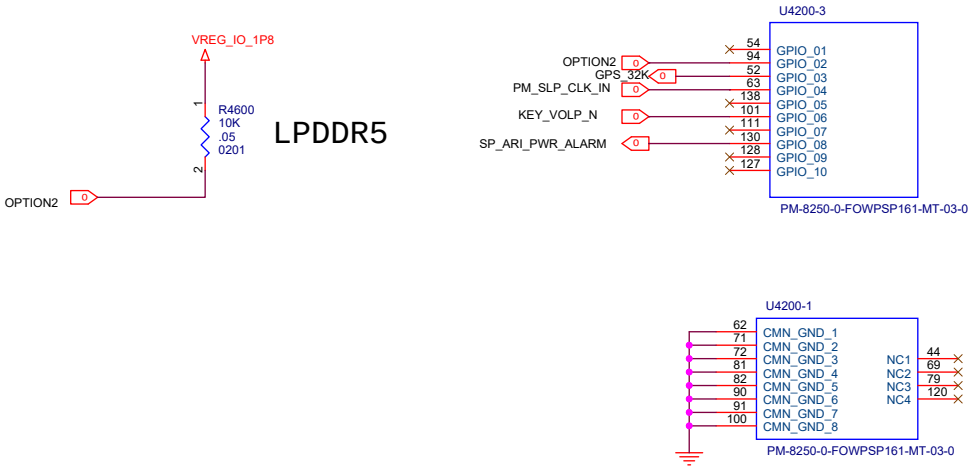

Title	K81A_TEST_BOARD	
Size A4	Document Number PM855 GPIO&GND	Rev
Date: Thursday, May 27, 2021	Sheet 47	

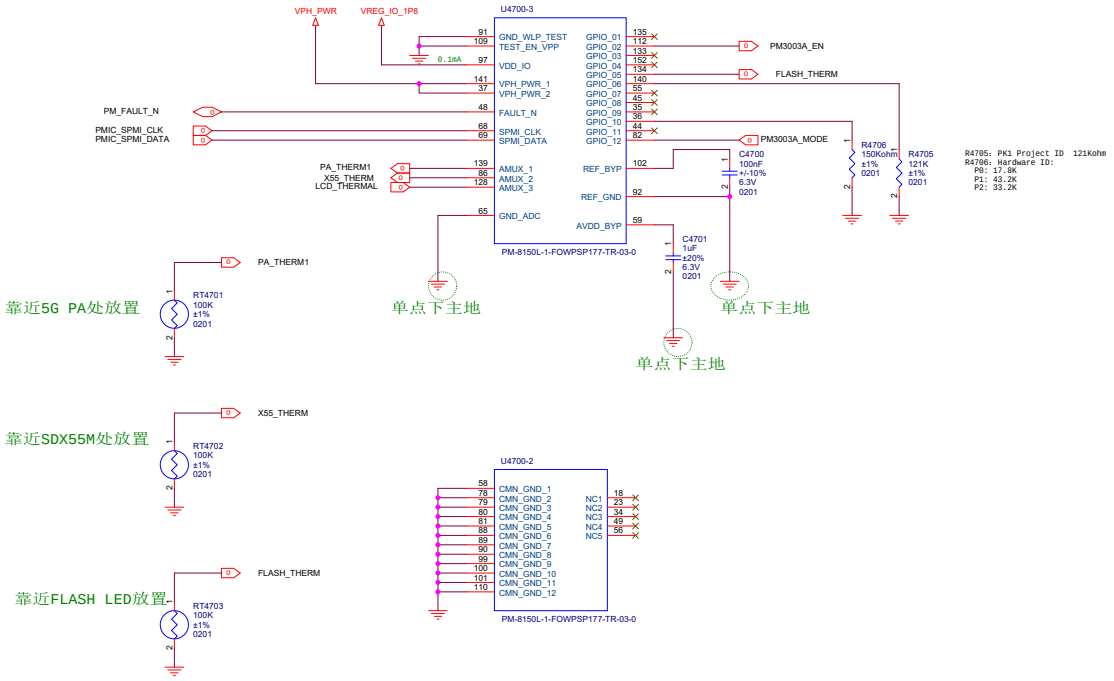

Title	K81A_TEST_BOARD	
Size A3	Document Number PM855A CTRL&GND	Rev
Date: Friday, May 28, 2021	Sheet	

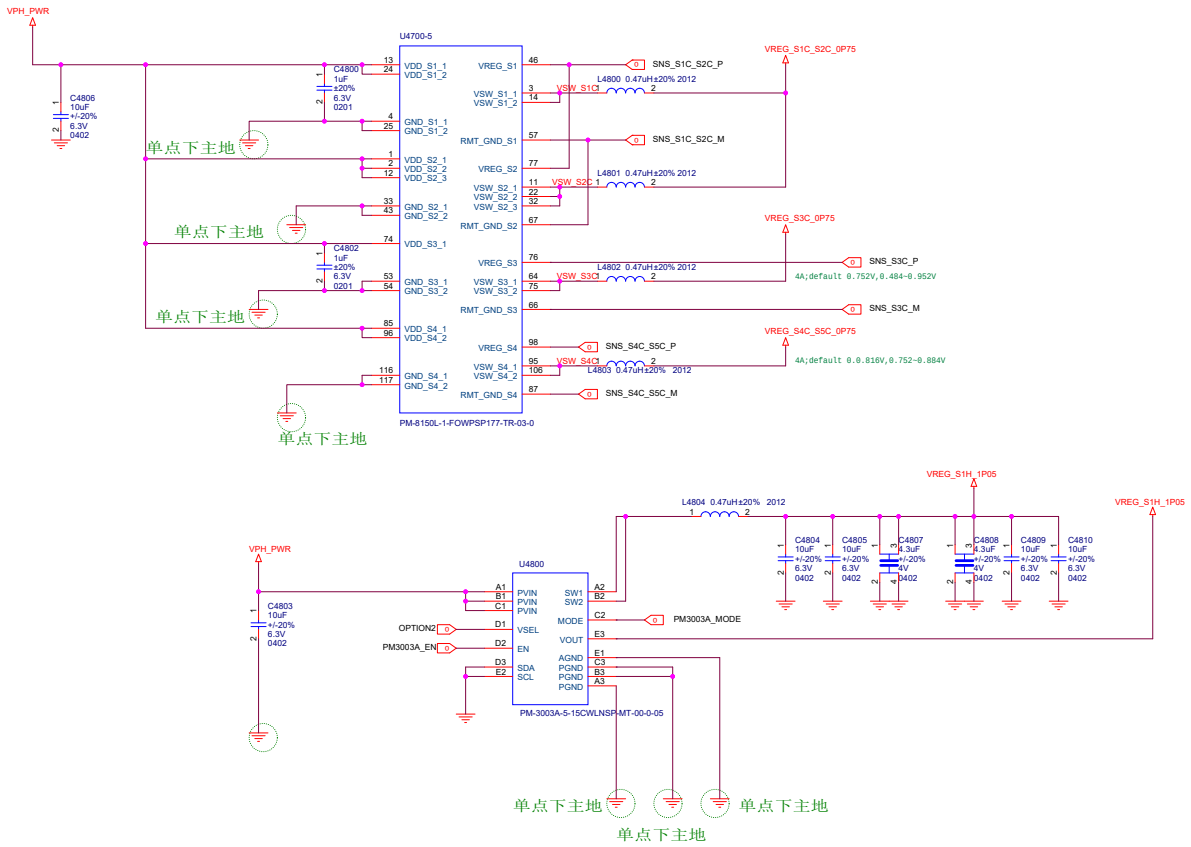

Title	K81A_TEST_BOARD	
Size A3	Document Number PM855A BUCK CONVERTER1	Rev
Date: Thursday, May 27, 2021	Sheet	

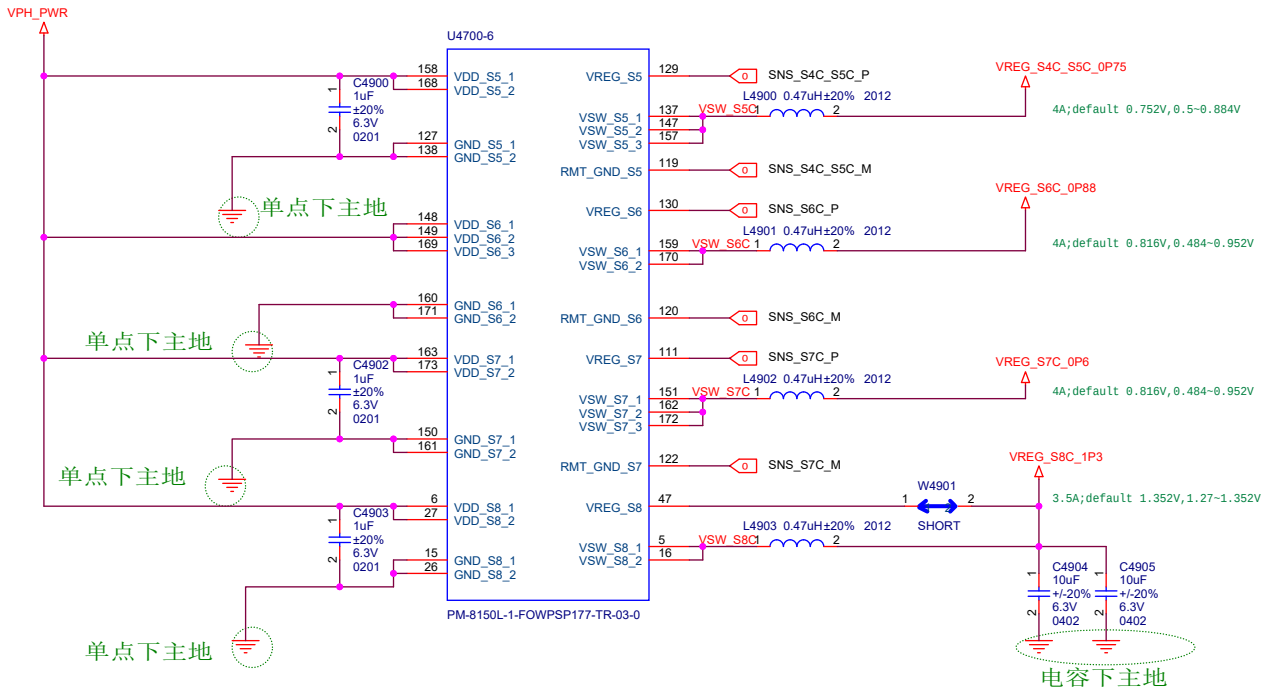

Title	K81A_TEST_BOARD	
Size A4	Document Number PM855A BUCK CONVERTER2	Rev
Date: Thursday, May 27, 2021	Sheet 49	

Make sure SCP(short circuit peotection) must be disabled

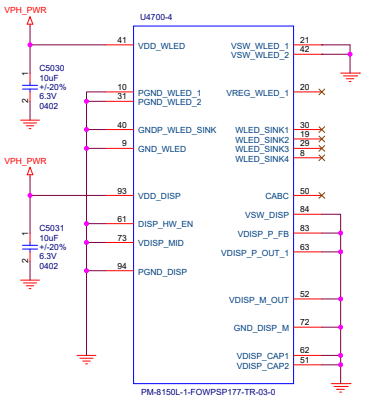

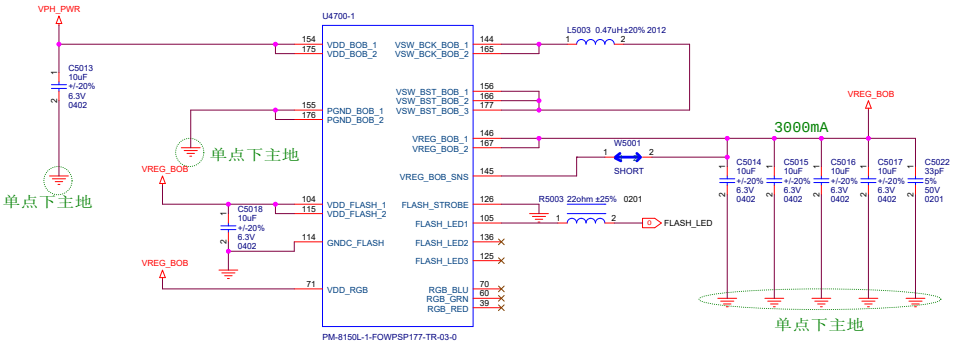

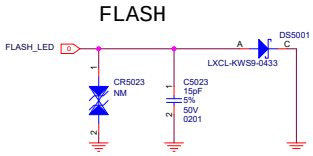

Title	K81A_TEST_BOARD	
Size A3	Document Number PM855A AMOLED&BOB&FLASH	Rev
Date: Thursday, May 27, 2021	Sheet	

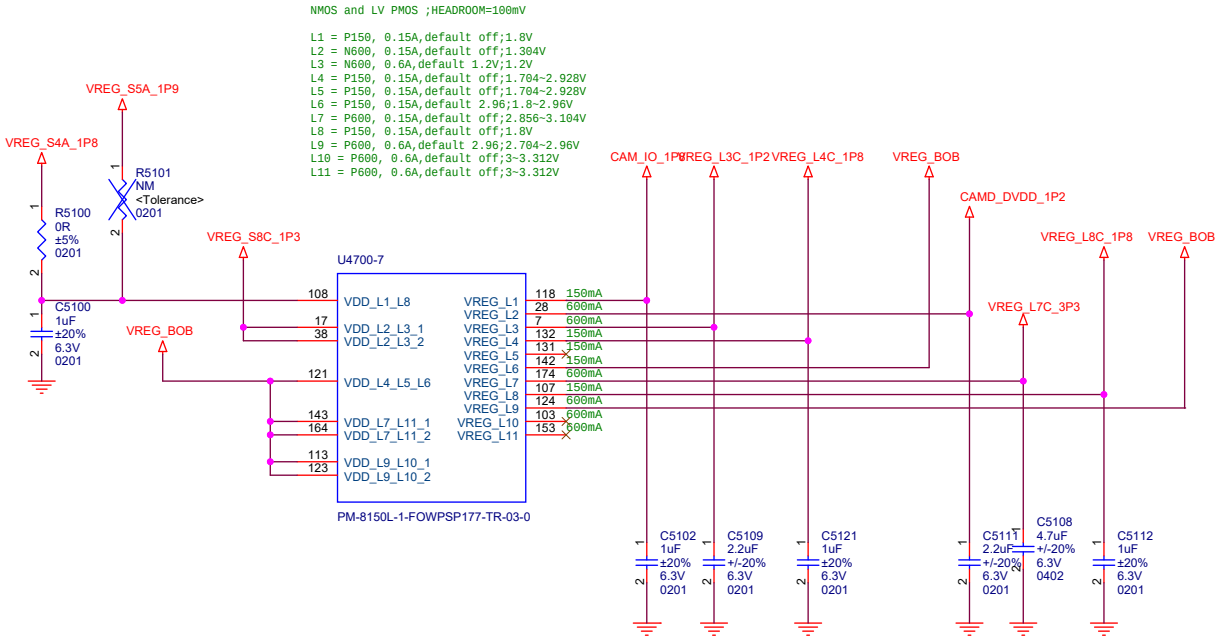

Title	K81A_TEST_BOARD	
Size A4	Document Number PM855A LDOs	Rev
Date: Thursday, May 27, 2021	Sheet 51	

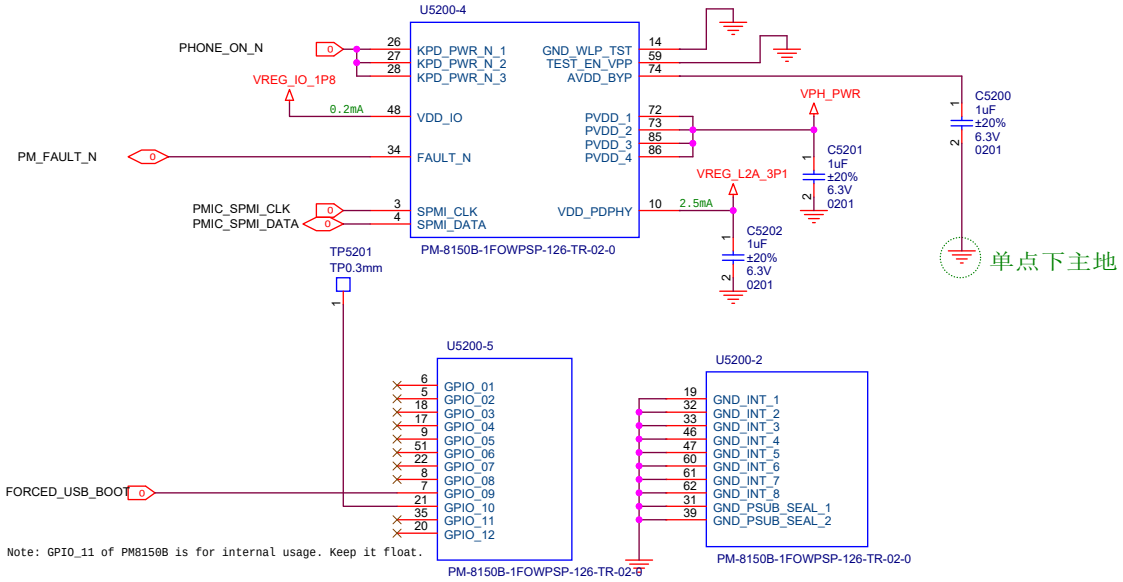

Note: GPIO_11 of PM8150B is for internal usage. Keep it float.

Note: GPIO_04 and GPIO_11 of PM8150B are for internal usage. Keep them float.
Keep GPIO_03 of PM8150B float. Don't use it for other purpose.
GPIO_06 of PM8150B is dedicated for SMB_STAT. Don't use it for other purpose.

Title	K81A_TEST_BOARD	
Size A4	Document Number PM855B CTRL&GND	Rev
Date: Thursday, May 27, 2021	Sheet 53	

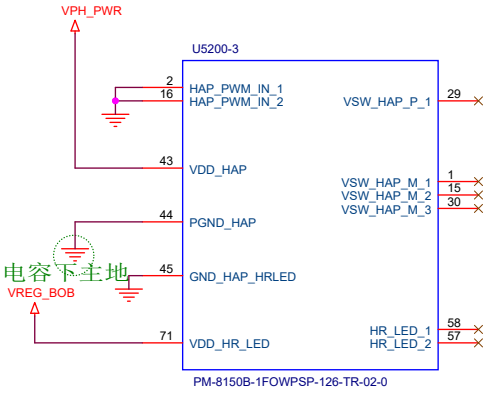

Title	K81A_TEST_BOARD	
Size A4	Document Number PM855B HAPTIC	Rev
Date: Thursday, May 27, 2021	Sheet 54	

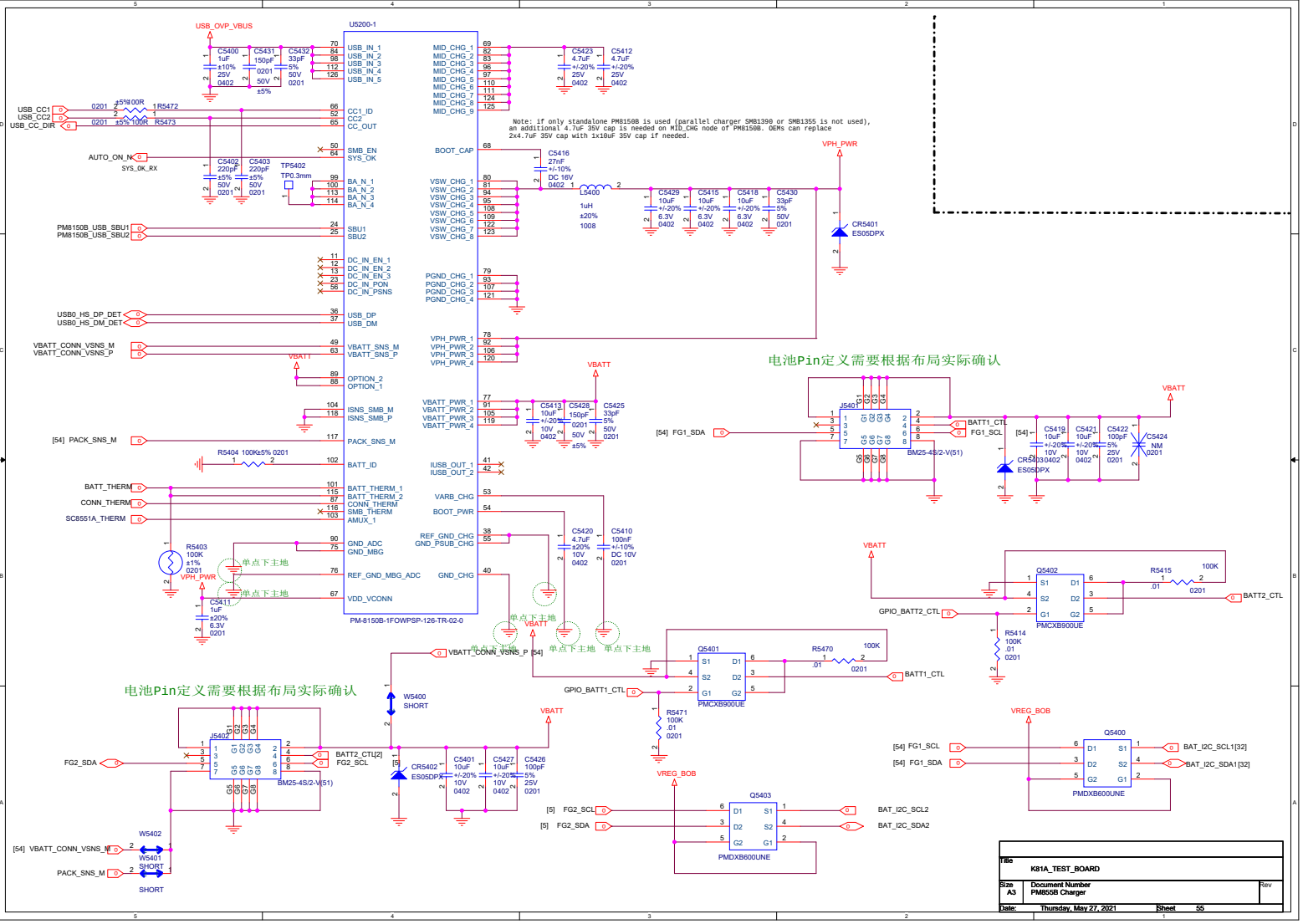

Title	K81A_TEST_BOARD
Size A3	Document Number PM855B Charger
Rev	
Date: Thursday, May 27, 2021	Sheet 55

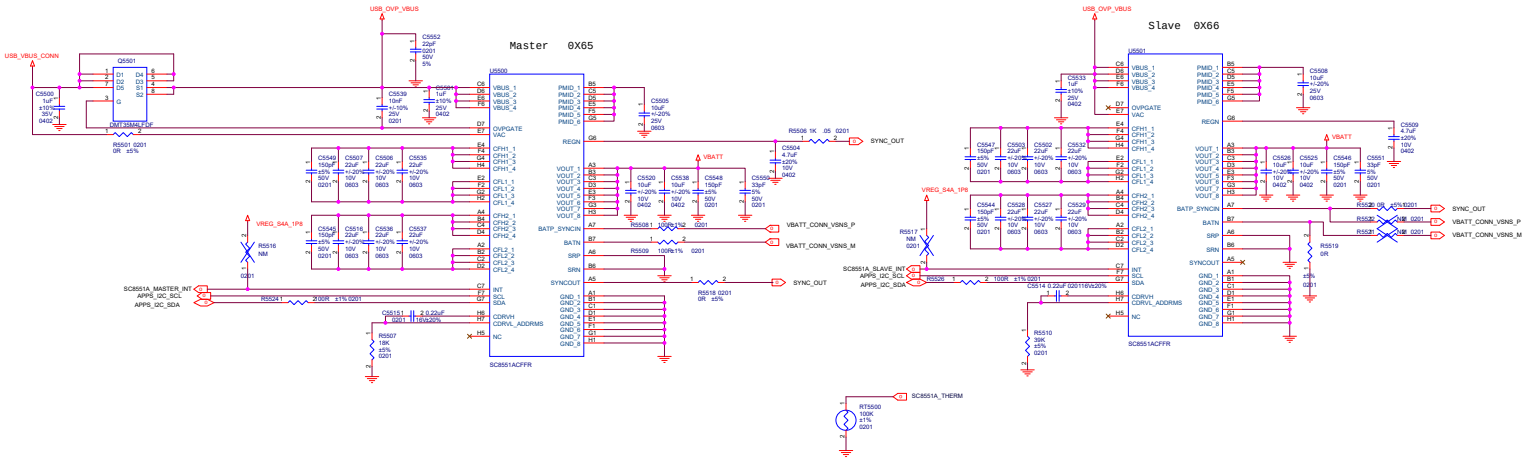

Title	K81A_TEST_BOARD
Size A2	Document Number SMB1398
Rev	
Date: Friday, May 28, 2021	Sheet

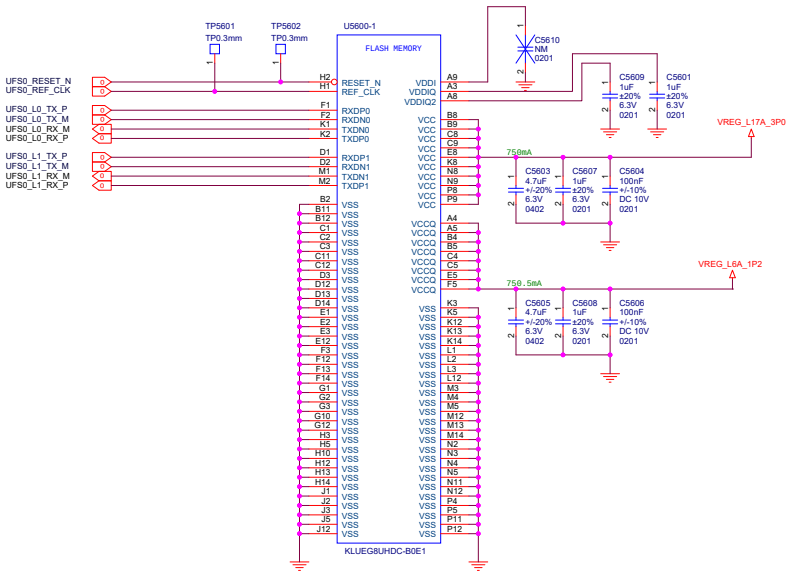

项目	配置	小米料号	P/N	供应商	描述	一供/二供	制程
K81(870)	6+128 8+256	276300000B79	KLUDG4UHDC-B0E1	Samsung	128GB UFS 3.1	First Source	V6
		276300000UJY	THGJFCT0T44BAKL	Kioxia	128GB UFS 3.0	Second Source	96L
		276300000C79	KLUEG8UHDC-B0E1	Samsung	256GB UFS 3.1	First Source	V6
		276100000H52	MT62F768M64D4BG-031 WT:A	Micron	6GB LPDDR5 for 865	First Source	1ynm
		276100000J79	K3LK7K70BM-BGCP	Samsung	8GB LPDDR5 for 875	First Source	1znm
		276100000P52	MT62F1G64D8CH-031 WT:B	Micron	8GB LPDDR5 for 875	Second Source	1znm

Title	K81A_TEST_BOARD	
Size A3	Document Number MEMORY	Rev
Date: Thursday, May 27, 2021	Sheet	

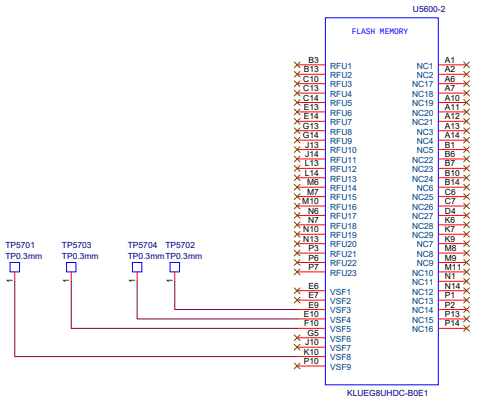

Title	K81A_TEST_BOARD	
Size A3	Document Number MEMORY-2	Rev
Date: Thursday, May 27, 2021	Sheet	

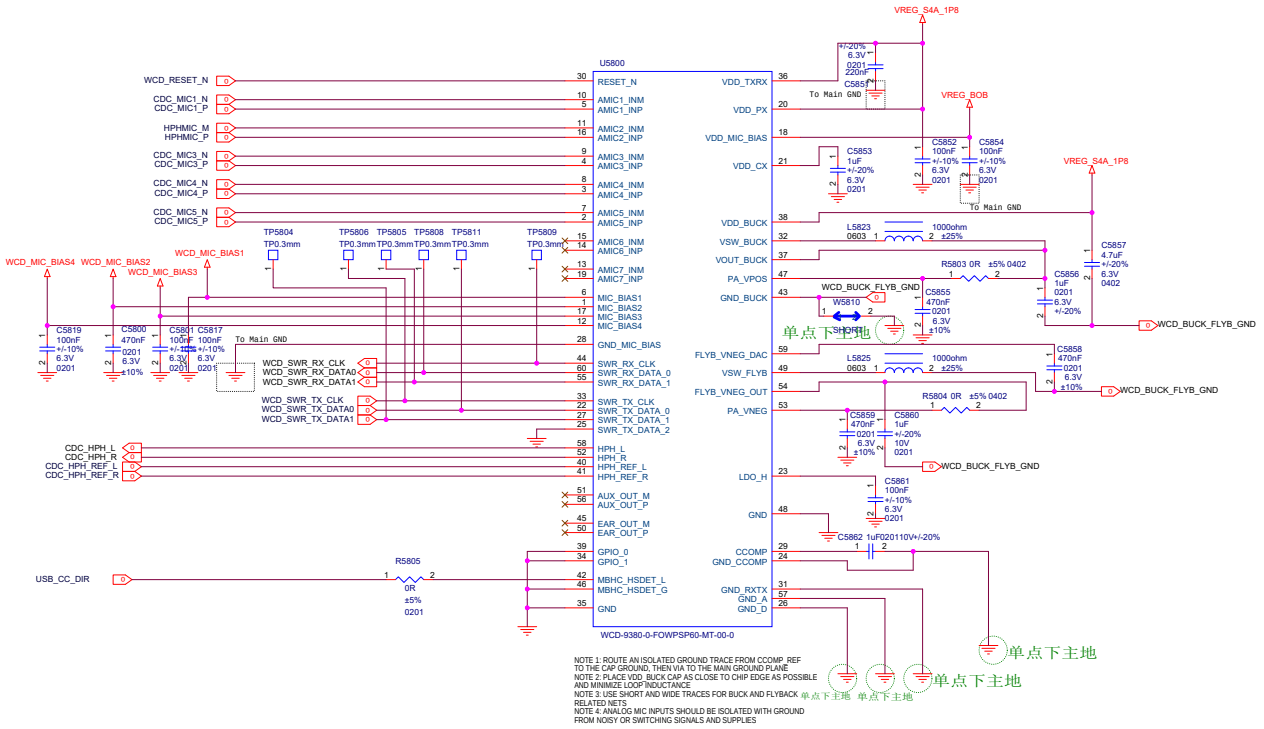

Title	K81A_TEST_BOARD	
Size A3	Document Number WCD9340-1	Rev
Date: Thursday, May 27, 2021	Sheet	

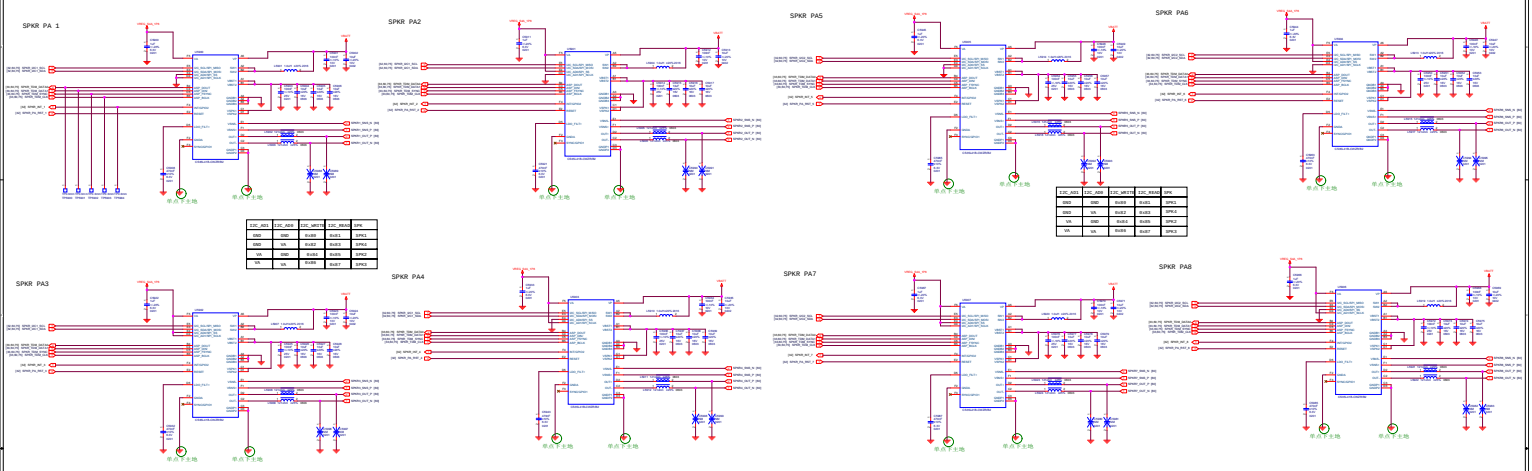

I2C_ADS	I2C_ADD	I2C_WRITE	I2C_READ	SPK
GND	GND	0x88	0x81	SPK1
GND	VA	0x82	0x83	SPK2
VA	GND	0x84	0x85	SPK3
VA	VA	0x86	0x87	SPK4

I2C_ADS	I2C_ADD	I2C_WRITE	I2C_READ	SPK
GND	GND	0x89	0x81	SPK1
GND	VA	0x82	0x83	SPK2
VA	GND	0x84	0x85	SPK3
VA	VA	0x86	0x87	SPK3

AUDIO SWITCH

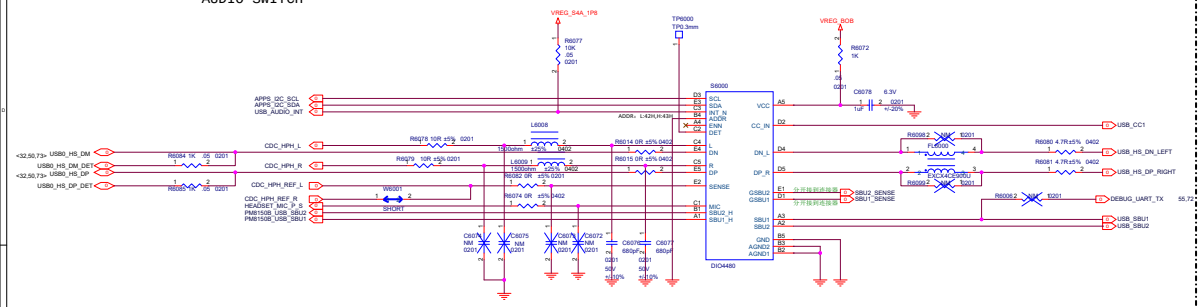

TOP MIC

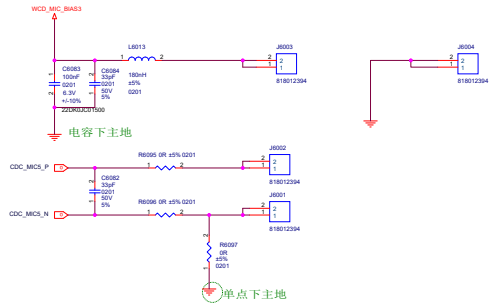

HEADSET

R6029、R6004、C6005靠近WCD9385（U5800）端放置

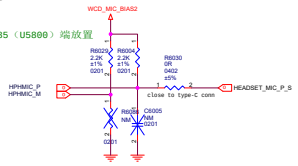

Title	K81A_TEST_BOARD
Size A2	Document Number Reserved(for AUDIO)
Rev	
Date: Thursday, May 27, 2021	Sheet

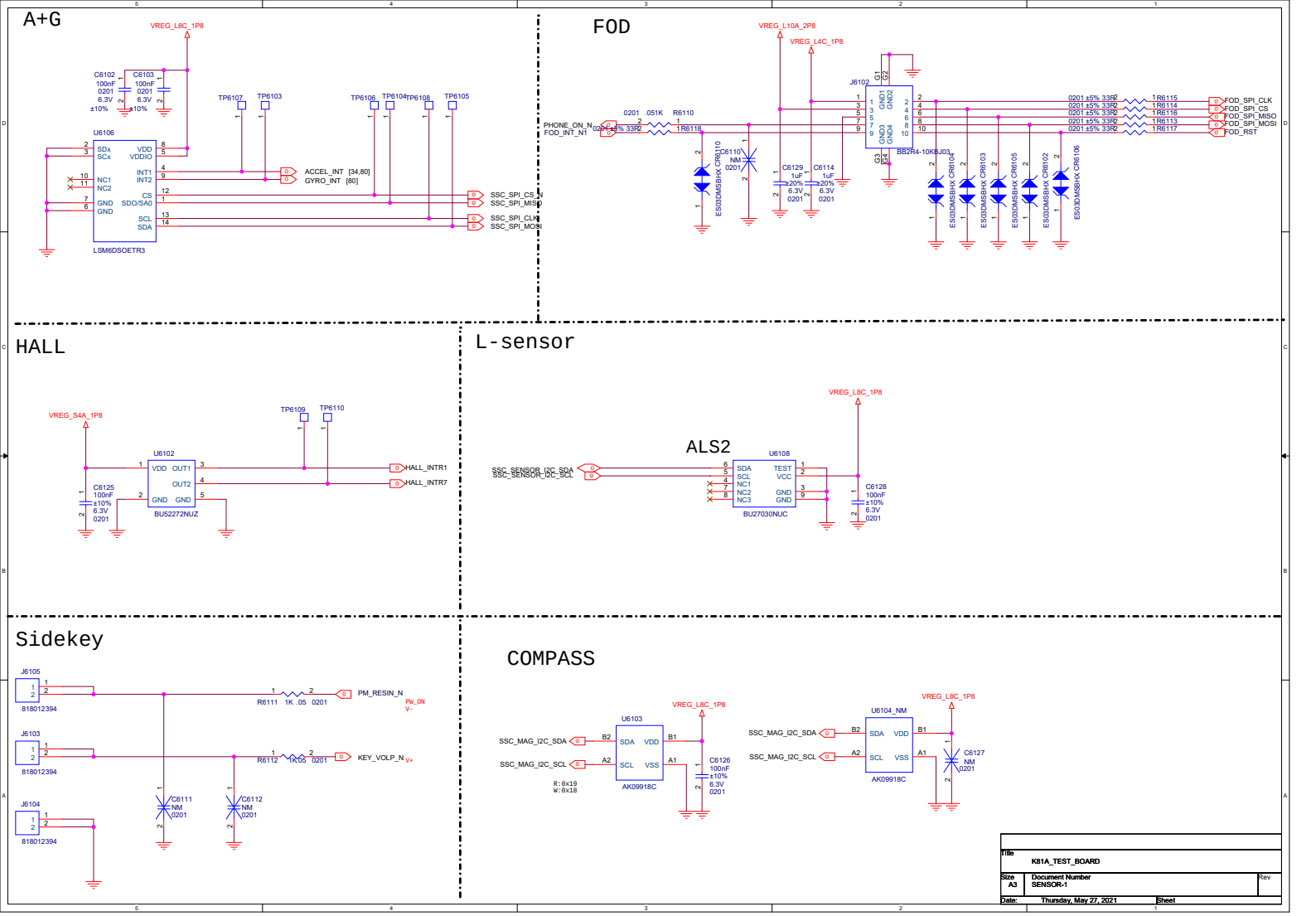
A+G
VREG_L8C_1P8
C6102 100nF 0201 6.3V ±10%
C6103 100nF 0201 6.3V ±10%
U6106
SDx SCx VDD VDDIO NC1 NC2 INT1 INT2 CS GND GND SDO/SA0 SCL SDA
LSM6DSOETR3
TP6107
TP6103
TP6106
TP6104
TP6108
TP6105
ACCEL_INT [34,80]
GYRO_INT [80]
SSC_SPI_CS_N
SSC_SPI_MISO
SSC_SPI_CLK
SSC_SPI_MOSI
FOD
VREG_L10A_2P8
VREG_L4C_1P8
J6102
PHONE_ON_N
FOD_INT_N1
0201 .051K R6110
0201 ±5% 33R2 R6118
C6110 NM 0201
ES03DM5BHX CR6110
C6129 1uF ±20% 6.3V 0201
C6114 1uF ±20% 6.3V 0201
BB2R4-10KBJ03
ES03DM5BHX CR6104
ES03DM5BHX CR6103
ES03DM5BHX CR6105
ES03DM5BHX CR6102
ES03DM5BHX CR6106
0201 ±5% 33R2 R6115
0201 ±5% 33R2 R6114
0201 ±5% 33R2 R6116
0201 ±5% 33R2 R6113
0201 ±5% 33R2 R6117
FOD_SPI_CLK
FOD_SPI_CS
FOD_SPI_MISO
FOD_SPI_MOSI
FOD_RST
HALL
VREG_S4A_1P8
TP6109
TP6110
U6102
VDD OUT1 OUT2 GND GND
BU52272NUZ
C6125 100nF ±10% 6.3V 0201
HALL_INTR1
HALL_INTR7
L-sensor
VREG_L8C_1P8
ALS2
U6108
SSC_SENSOR_I2C_SDA
SSC_SENSOR_I2C_SCL
SDA SCL NC1 NC2 NC3 TEST VCC GND GND
BU27030NUC
C6128 100nF ±10% 6.3V 0201
Sidekey
J6105
J6103
J6104
818012394
R6111 1K .05 0201
PM_RESIN_N
PW_ON
V-
R6112 1K05 0201
KEY_VOLP_N
V+
C6111 NM 0201
C6112 NM 0201
COMPASS
VREG_L8C_1P8
U6103
SSC_MAG_I2C_SDA
SSC_MAG_I2C_SCL
SDA VDD SCL VSS
AK09918C
R:0x19
W:0x18
C6126 100nF ±10% 6.3V 0201
U6104_NM
VREG_L8C_1P8
C6127 NM 0201
Title
K81A_TEST_BOARD
Size A3
Document Number SENSOR-1
Rev
Date: Thursday, May 27, 2021
Sheet

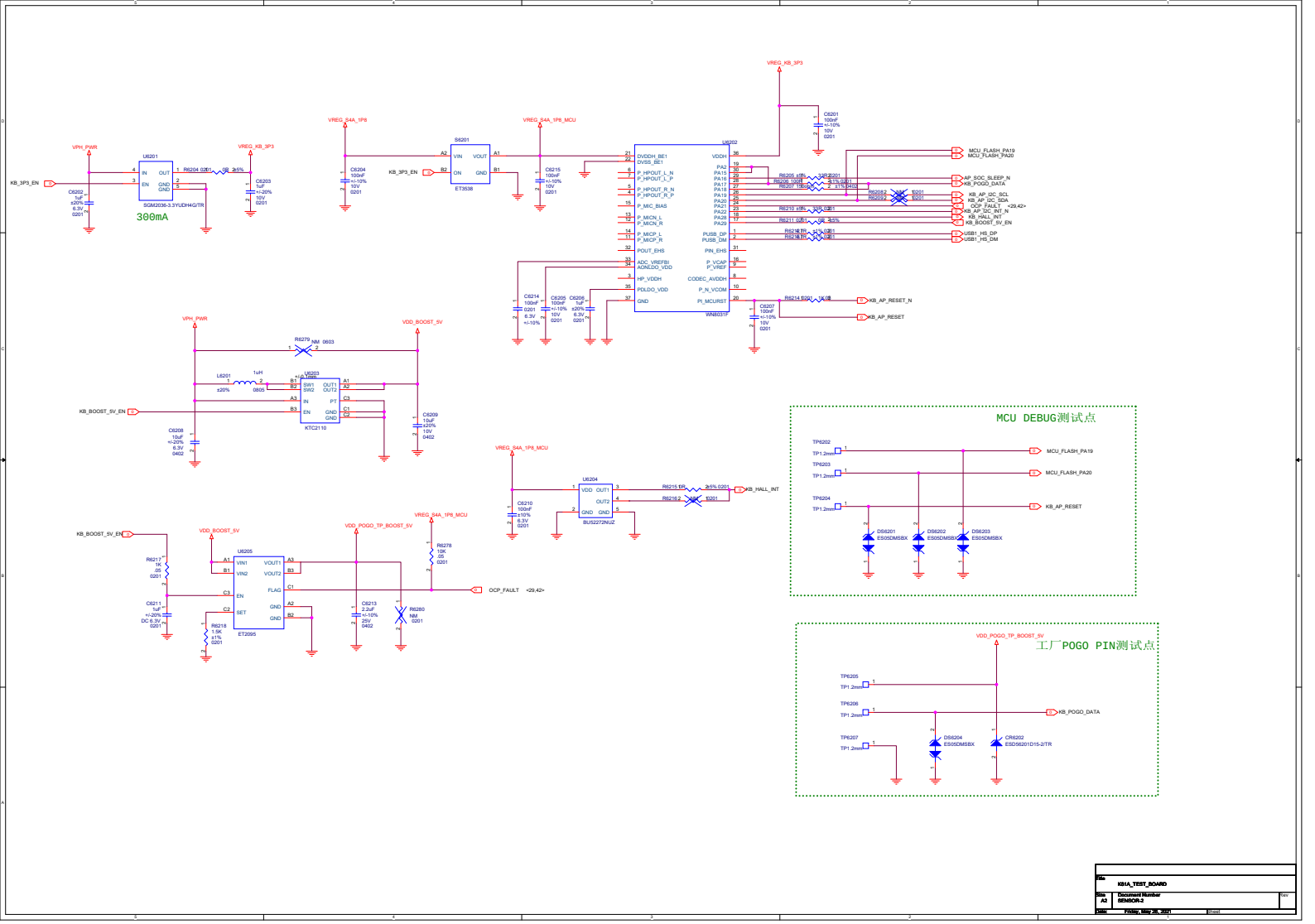

Title	K81A_TEST_BOARD		
Size	A3	Document Number SEMKOR-2	Rev
Date:	Friday, May 28, 2021	Sheet	

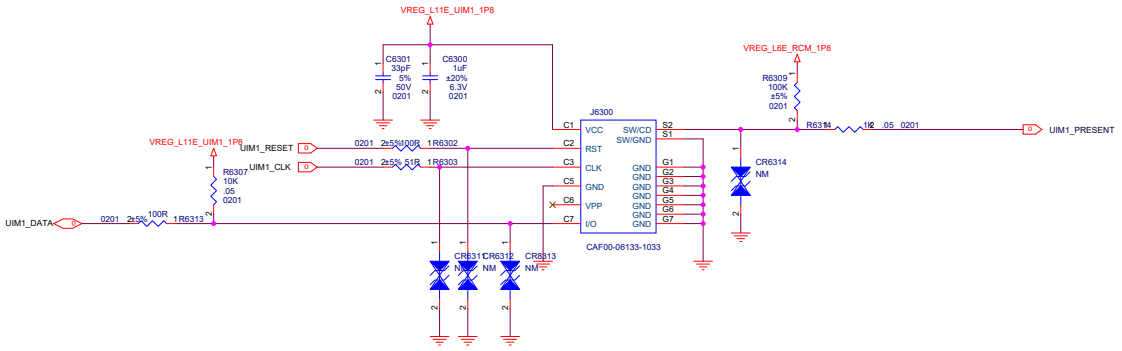

Title	K81A_TEST_BOARD
Size A3	Document Number SIM
Date: Thursday, May 27, 2021	Sheet

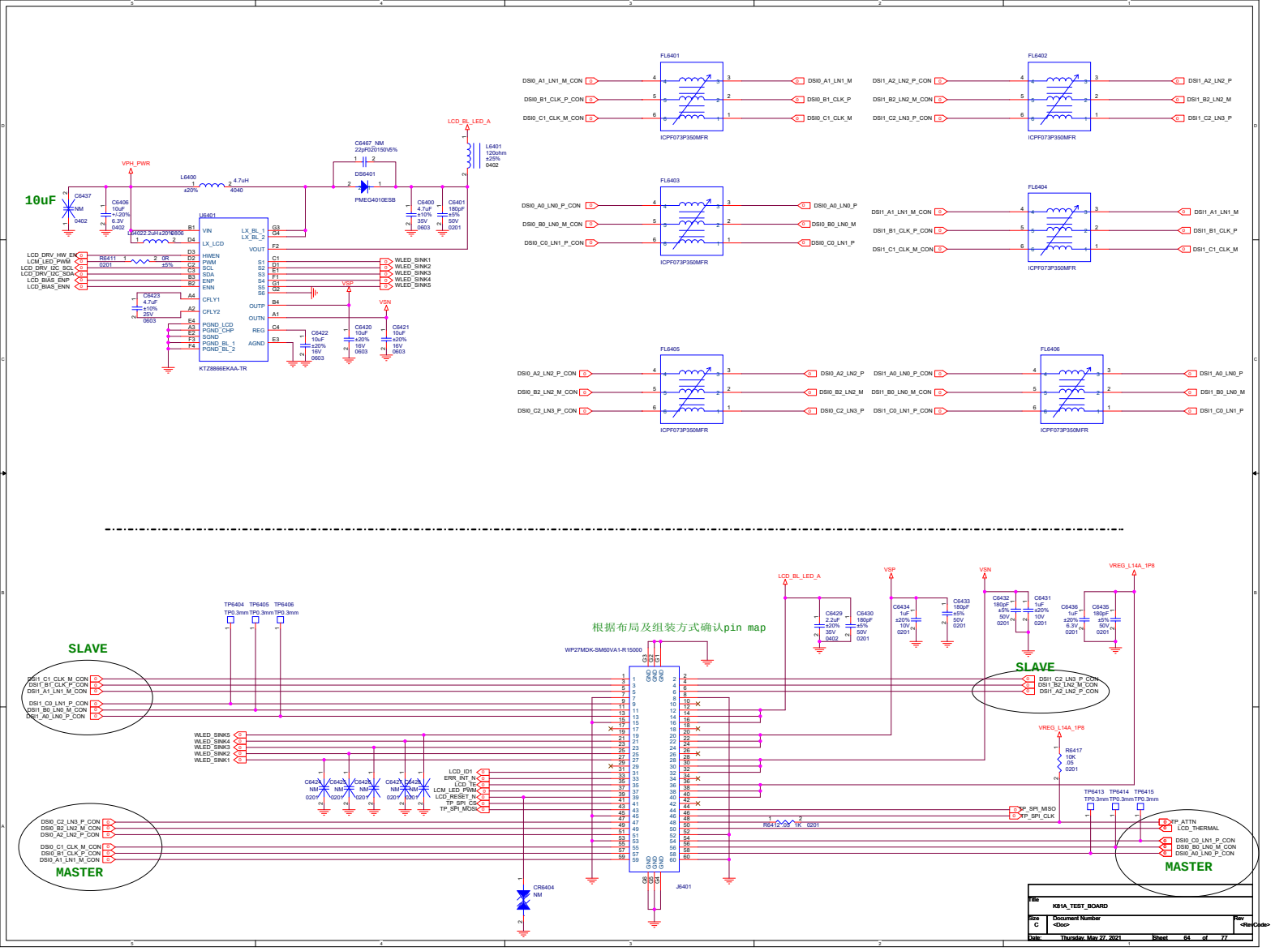

Title	K81A_TEST_BOARD	
Size C	Document Number <Doc>	Rev <RevCode>
Date: Thursday, May 27, 2021	Sheet 64 of 77	

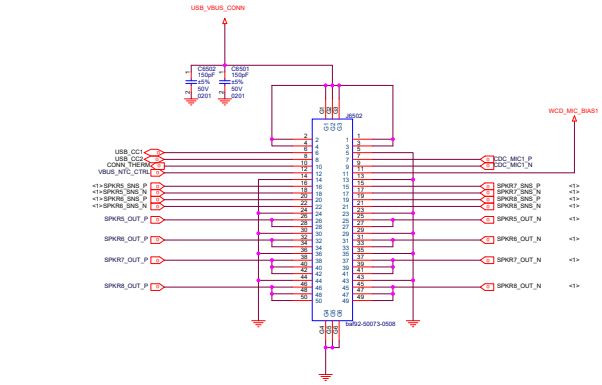

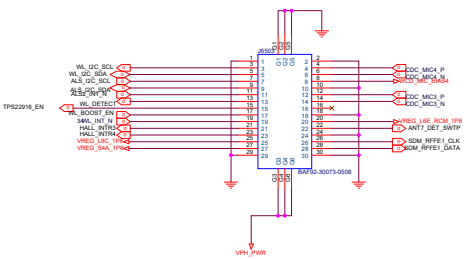

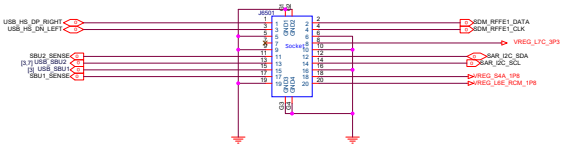

确认连接器的过电流能力

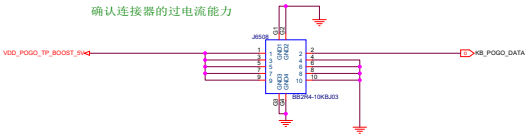

Title	K81A_TEST_BOARD
Size	A2
Document Number	BTB
Rev	
Date:	Thursday, May 27, 2021
Sheet	

Front 8M （OV16A）

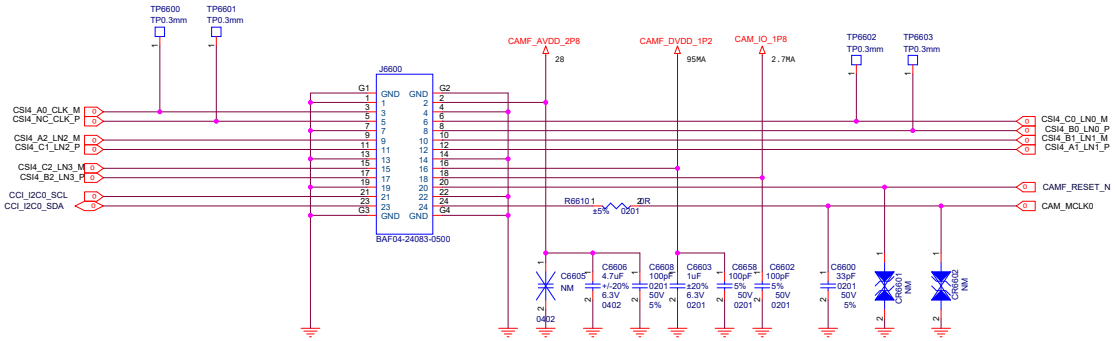

Title	K81A_TEST_BOARD	
Size A3	Document Number FRONT CAMERA	Rev
Date: Thursday, May 27, 2021	Sheet	

WIDE 50M(OV50C) FOR K81

WIDE 13M(OV13B10) FOR K81A

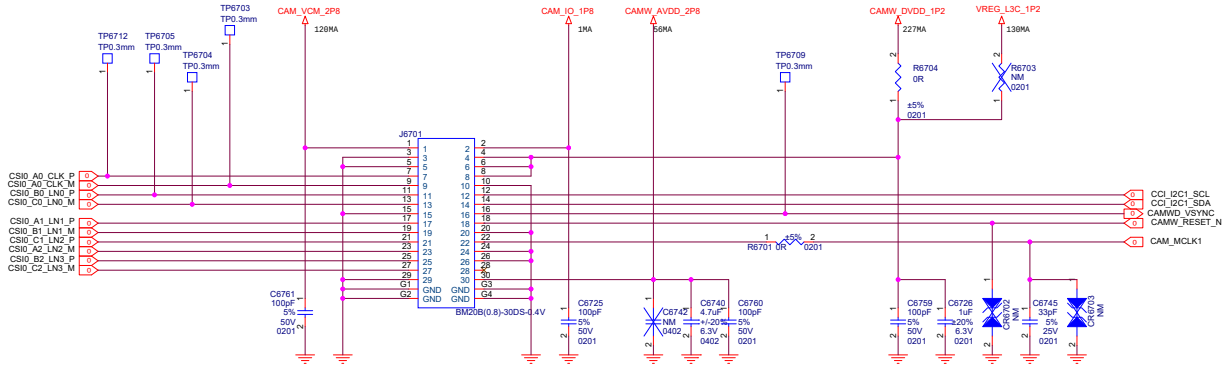

5M DEEP (Hi-556)

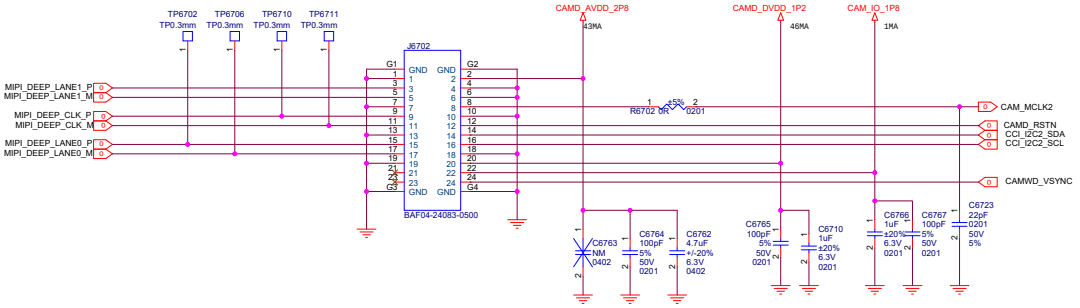

Title	K81A_TEST_BOARD	
Size A3	Document Number WIDE&TELE CAMERA	Rev
Date: Thursday, May 27, 2021	Sheet	

Title	K81A_TEST_BOARD
Size A3	Document Number ULTRA CAMERA
Rev	
Date:	Thursday, May 27, 2021
Sheet	

Title	K81A_TEST_BOARD
Size A3	Document Number CAMERA LDOs
Rev	
Date:	Thursday, May 27, 2021
Sheet	

L1 NMOS LDO 1000mA NMOS LDO HEADROOM 200mA 75mV

L2 NMOS LDO 1000mA NMOS LDO HEADROOM 500mA 187.5mV

NMOS LDO HEADROOM 1000mA 200mV

L3-L7 PMOS LDO 400mA HEADROOM 200MV~

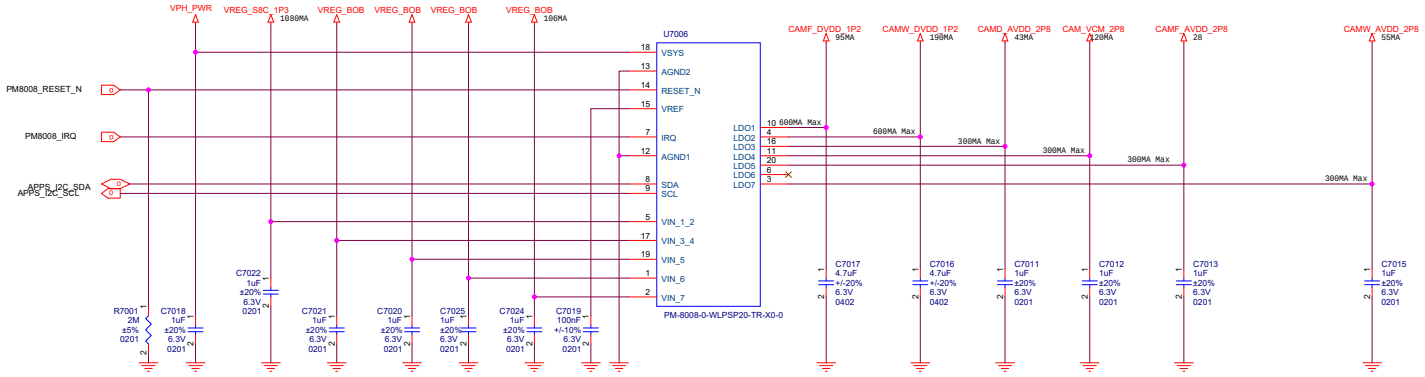

Title	K81A_TEST_BOARD	
Size A3	Document Number TEST POINT	Rev
Date: Thursday, May 27, 2021	Sheet	

Title	K81A_TEST_BOARD
Size: A2	Document Number: USB CONNECTOR
Rev	
Date: Thursday, May 27, 2021	Sheet

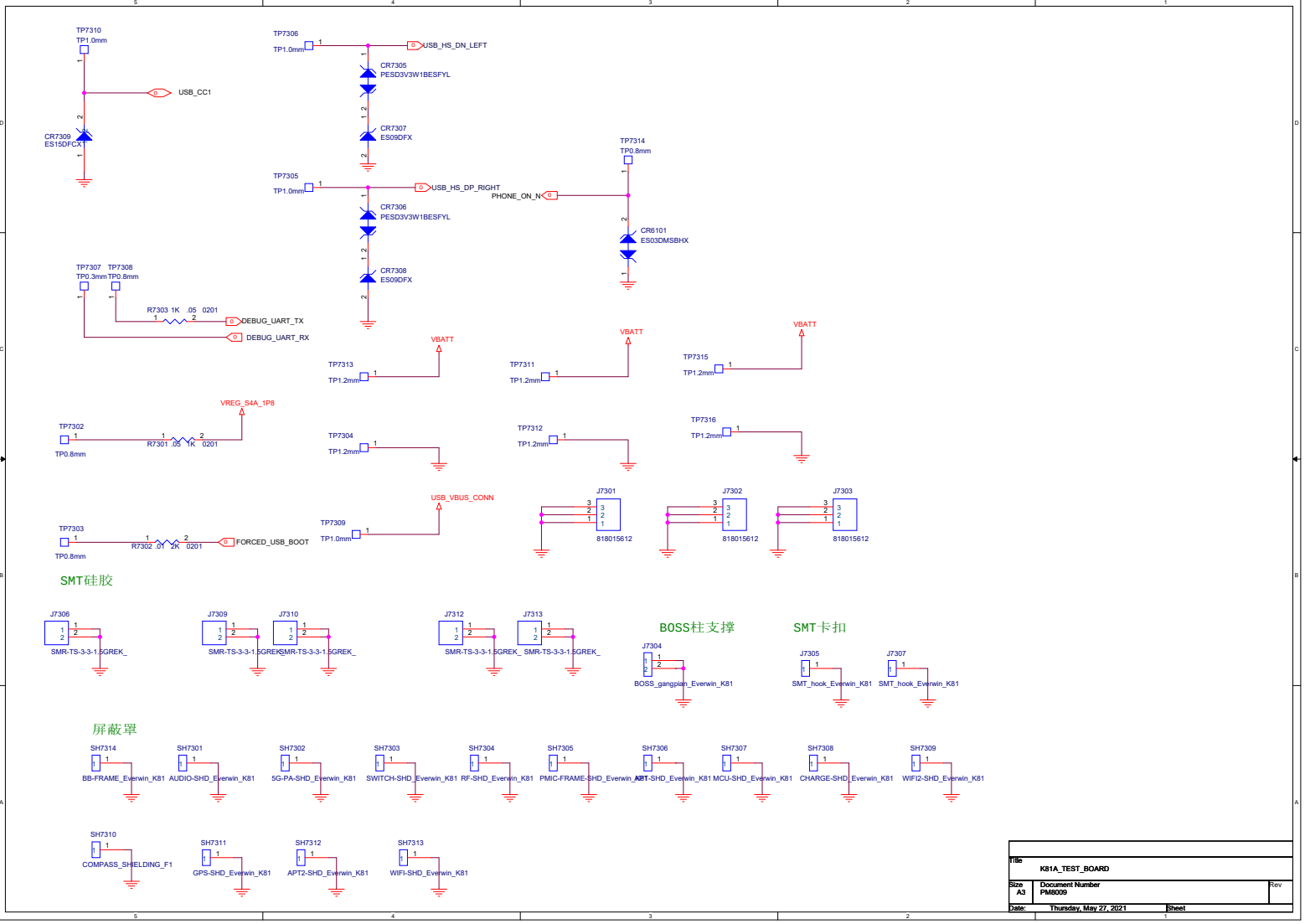

Title	K81A_TEST_BOARD	
Size A3	Document Number PM8009	Rev
Date: Thursday, May 27, 2021	Sheet	

Title	K81A_TEST_BOARD	
Size A3	Document Number Reserved	Rev
Date: Thursday, May 27, 2021	Sheet	

Title	K81A_TEST_BOARD
Size A3	Document Number PM8009
Rev	
Date:	Thursday, May 27, 2021
Sheet	

喇叭弹片修改

SPK1

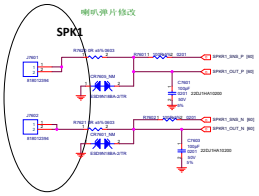

喇叭弹片修改

SPK2

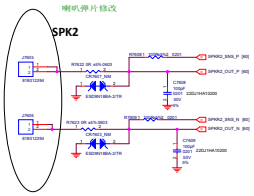

喇叭弹片修改

SPK3

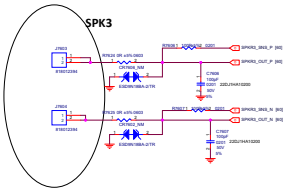

喇叭弹片修改

SPK4

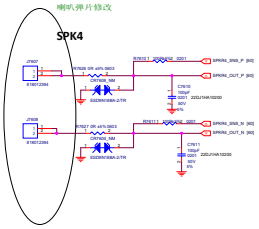

TITLE	KIVIA_TEST_BOARD	
SIZE D	Document Number <Doc>	REV <Rev>
DATE: <Date>	SHEET <Sheet> OF <Sheet>	

Title	K81A_TEST_BOARD	
Size C	Document Number <Doc>	Rev <RevCode>
Date: Thursday, May 27, 2021	Sheet 77 of 77	